REFER TO STD. TE710 FOR ADDITIONAL INFORMATION ON TEMPORARY TRAFFIC CONTROL SIGNS, SIGN SPACING, CONFLICTING SIGNS AND AFAD'S.
REFER TO STD. TE702 FOR INFORMATION ON TAPERS AND CHANNELIZING DEVICES.
REFER TO STD. TE700 FOR LENGTH OF BUFFER SPACE.

STATE	PROJECT NO.	YEAR	SHEET NO.	TOTAL SHEETS
KANSAS	XX-XX XX-XXXX-XX	XXXX	XXX	XXX

STOP/SLOW PADDLE AUTOMATED FLAGGER ASSISTANCE DEVICE (AFAD)

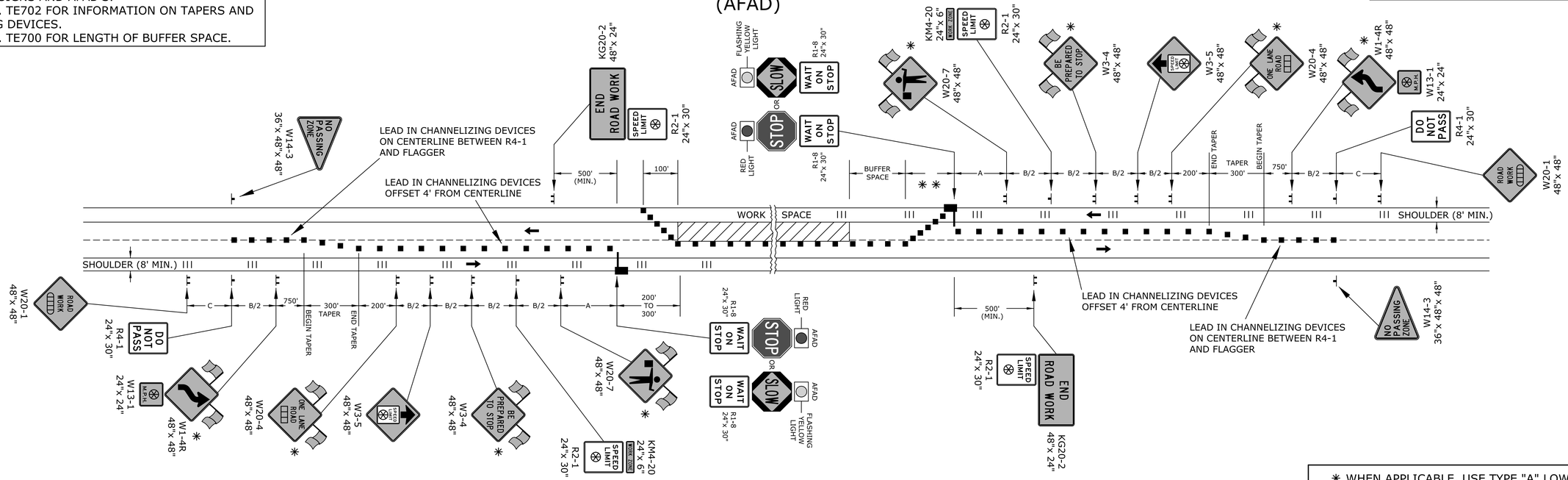

✳ WHEN APPLICABLE, USE TYPE "A" LOW INTENSITY WARNING LIGHTS AS DIRECTED BY ENGINEER.

✳✳ THERE SHOULD BE A MINIMUM OF SIX (6) CHANNELIZERS SPACED AT 20' INTERVALS.

RED/YELLOW LENS AUTOMATED FLAGGER ASSISTANCE DEVICE (AFAD)

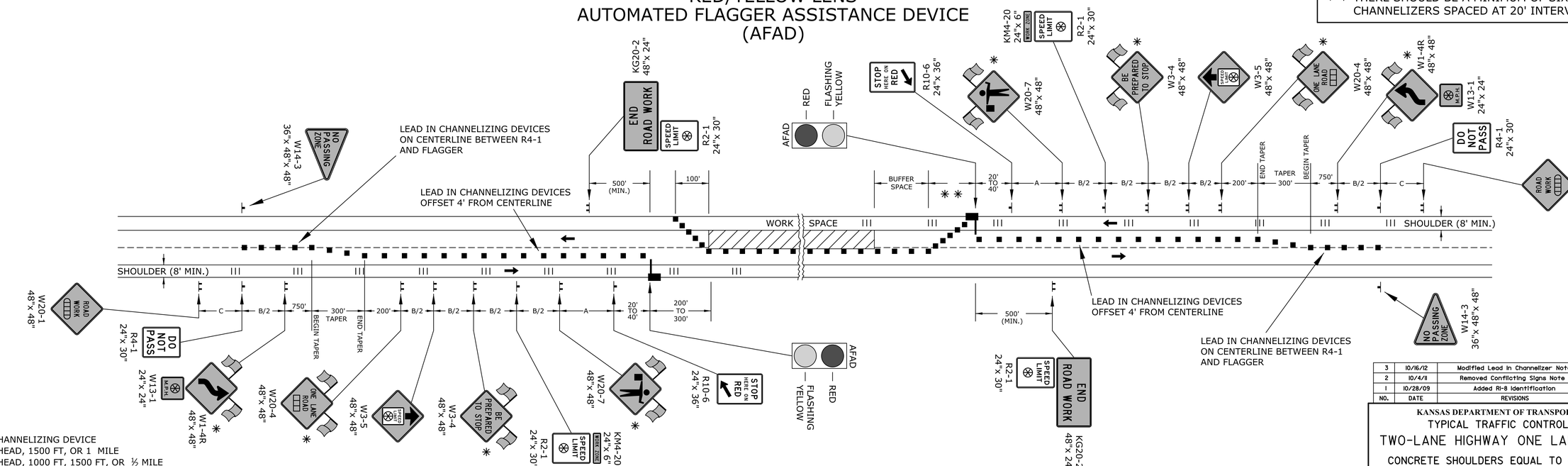

- ■ CHANNELIZING DEVICE
- AHEAD, 1500 FT, OR 1 MILE
- AHEAD, 1000 FT, 1500 FT, OR ½ MILE
- SPEED TO BE DETERMINED BY THE ENGINEER
- TYPE "A" LOW INTENSITY WARNING LIGHT
- EXISTING SHOULDER RUMBLE STRIPS
- AFAD

NO.	DATE	REVISIONS	BY	APP'D
3	10/16/12	Modified Lead In Channelizer Note	J.A.M.	K.P.
2	10/4/11	Removed Conflicting Signs Note	J.A.M.	K.P.
1	10/28/09	Added R1-8 Identification	J.A.M.	A.A.A.

KANSAS DEPARTMENT OF TRANSPORTATION

TYPICAL TRAFFIC CONTROL A.F.A.D.

TWO-LANE HIGHWAY ONE LANE CLOSED

CONCRETE SHOULDERS EQUAL TO OR GREATER THAN 8 FT WITH OR WITHOUT RUMBLE STRIPS

TE729

FHWA APPROVAL		10/16/12	APP'D	Kristina Pyle
DESIGNED	J.S.H.	DETAILED	J.S.H.	QUANTITIES	TRACED
DESIGN CK.		DETAIL CK.		QUAN. CK.	TRACE CK.

KDOT Graphics Certified 10-23-2012

Sh. No. XXX

Plotted : 24-OCT-2012 07:54
Traffic

Drawn By : jmadrid
File : te729.dgn

KDOT Graphics Certified