STATE	PROJECT NO.	YEAR	SHEET NO.	TOTAL SHEETS
KANSAS		0	0	

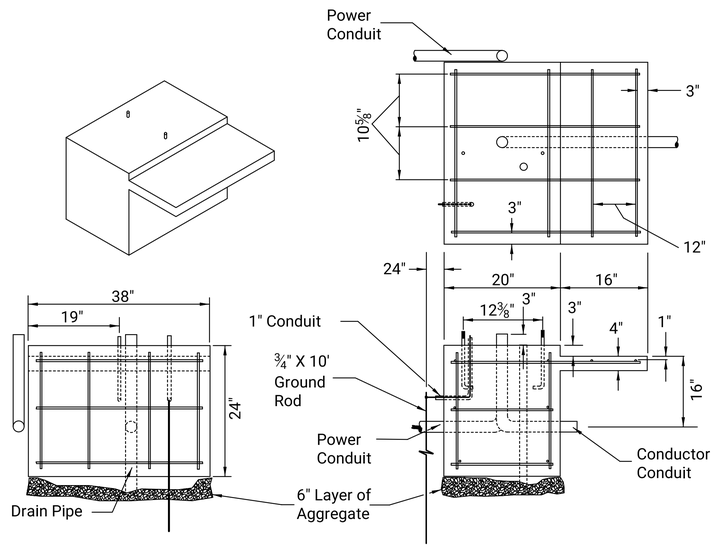

NEMA SIZE 5 (M) CABINET FOUNDATION DETAILS ✱

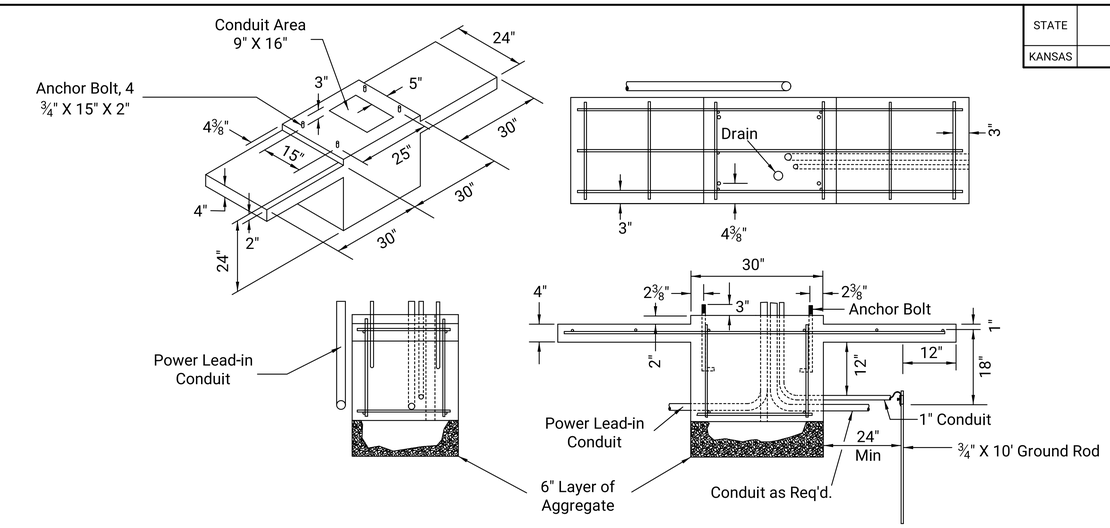

332 CABINET FOUNDATION DETAILS ✱

✱ NOTE: All reinforcing bars used in the construction of cabinet foundations shall be #4.

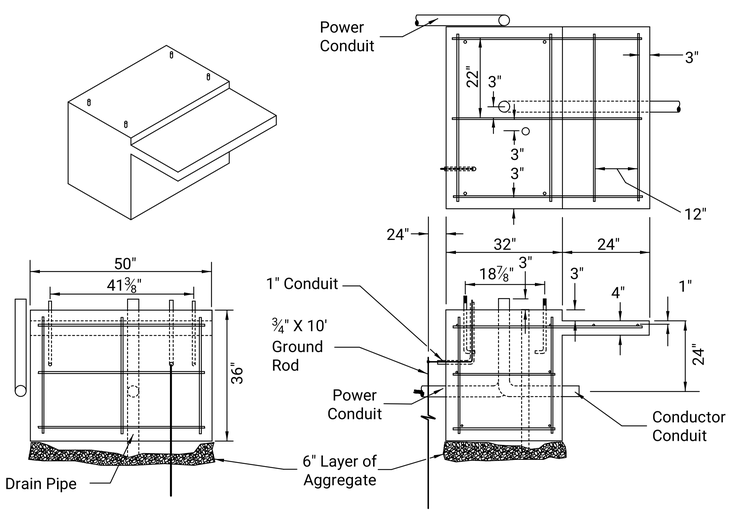

NEMA SIZE 6 (P) CABINET FOUNDATION DETAILS ✱

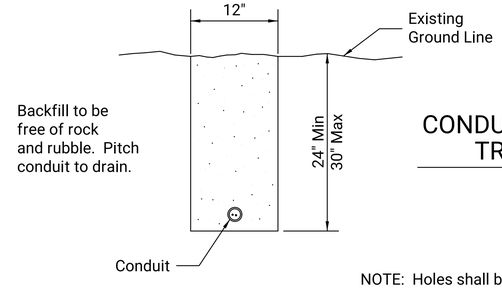

CONDUIT INSTALLATION TRENCH DETAIL

NOTE: Holes shall be drilled before the sawcut.

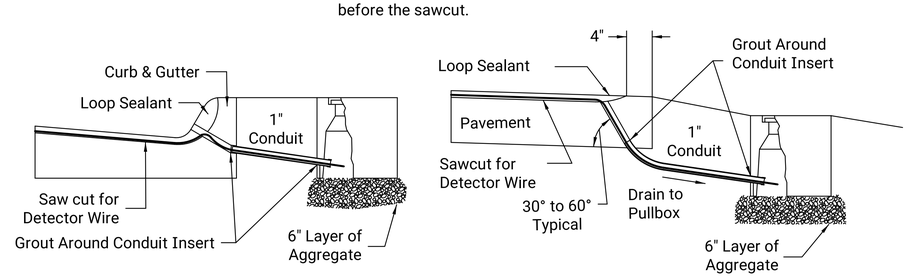

JUNCTION BOX INSTALLATION DETAILS WITH & WITHOUT CURB & GUTTER

NOTE: No. 6 AWG bare solid copper wire of type, ASTM B-3, shall be used as a continuous ground wire throughout the signal system.

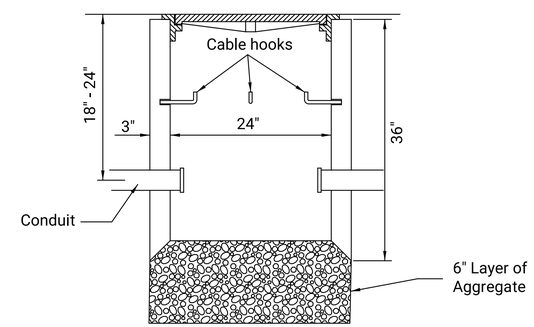

SERVICE BOX INSTALLATION DETAIL

NO.	DATE	REVISIONS	BY	APP'D
03	09-24-15	Removed "TYPE II" changed to SIZE 6 (P)	C.P.A.	B.D.G.
02	09-24-15	Removed "TYPE I" changed to SIZE 5 (M)	C.P.A.	B.D.G.
01	10-25-15	Removed "B" from the 332 Series	C.P.A.	B.D.G.

KANSAS DEPARTMENT OF TRANSPORTATION

TRAFFIC SIGNAL INSTALLATION DETAIL SHEET

TE110

FHWA APPROVAL		12-31-15	APP'D.	Brian D. Gower	
DESIGNED	C.P.A.	DETAILED	C.P.A.	QUANTITIES	TRACED
DESIGN CK.	B.D.G.	DETAIL CK.	B.D.G.	QUAN.CK.	TRACE CK.

KDOT Graphics Certified 07-18-2022 Sh. No. 0

KDOT Graphics Certified

Plotted by : Joyce.Poitevint@ks.gov 2-AUG-2022 19:42
File : te110.dgn