| STATE | PROJECT NO. | YEAR | SHEET NO. | TOTAL SHEETS |
|---|---|---|---|---|
| KANSAS | | 0 | 0 | |

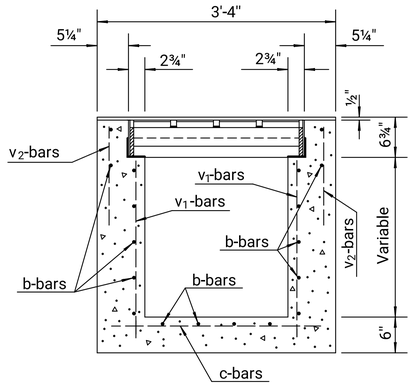


SECTION D-D

Note: All reinforcing shall be #4 at 6" centers. Minimum clear distance to reinforcement shall be 1½".

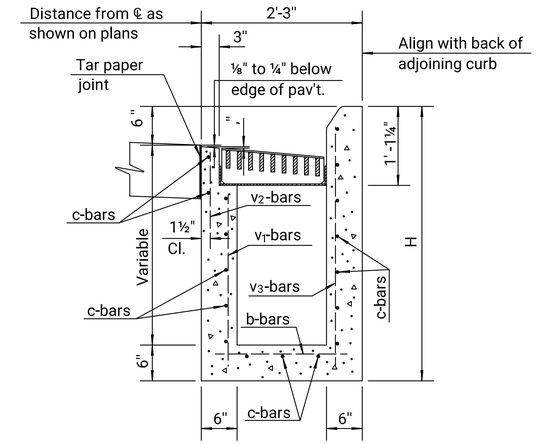


SECTION A-A

Notes:

Concrete Grade 3.0 (AE), or the mix used in Concrete Pavement, at the Contractor's option, shall be used throughout.

All exposed edges shall be finished with an edging tool.

Reinforcing bars shall be bent around pipe.

No reduction in concrete quantities shall be made for pipe openings.

When directed by the Engineer, a small opening in the back of the inlet shall be provided in order to drain a low area. Reinforcing bars shall extend through the opening. No reduction in concrete quantities will be made for this opening.

The floor of the inlet shall be shaped as shown in various "EXAMPLES" on Reinforced Concrete Manhole Standard Drawing RD633.

No addition in concrete quantities shall be made for shaping floor of inlet.

No reduction in pay length of curb, gutter, or curb & gutter will be made through the inlet area.

All exposed structural steel shall be painted with a coat of inorganic zinc primer and then with a topcoat or a field coat of organic zinc, each coat to be 3 to 4 mils. As an alternate, the grate and frame may be hot dip galvanized after fabrication in accordance with the Standard Specifications.

All structural steel shall comply with ASTM A-36,A-242, or A-441.

Curb and Gutter sections shall be shaped as shown where required by the installation of curb inlets. This work shall be subsidiary to other bid items.

See sheet entitled "Reinforcing Steel for Inlets and Manholes" for details and quantities.

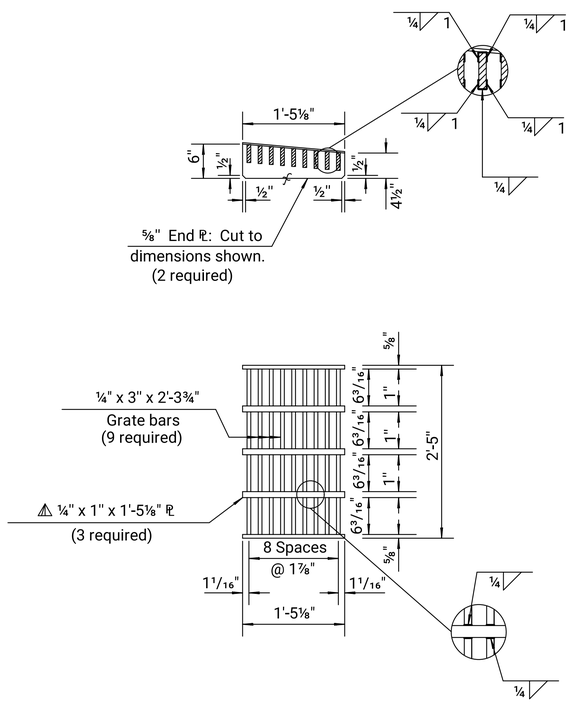


GRATE AND FRAME

Welded Structural Steel Grate & Frame.
⚠ Weight = 195 lbs. each.

# Hot or cold poured joint sealing compound, or premolded Exp. Jt. Filler (Type B or C).

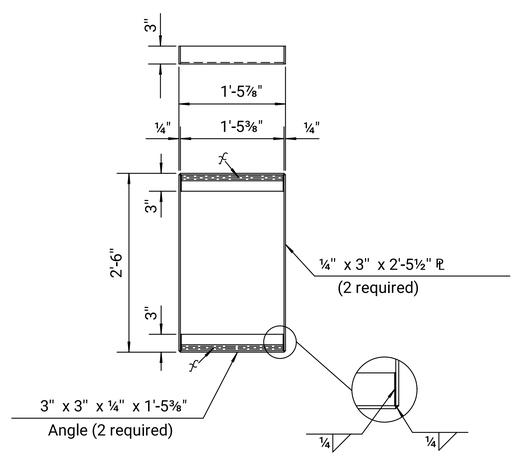


Note: To prevent grate from rocking on bearing angles, machine finish surfaces indicated thus "⌿".

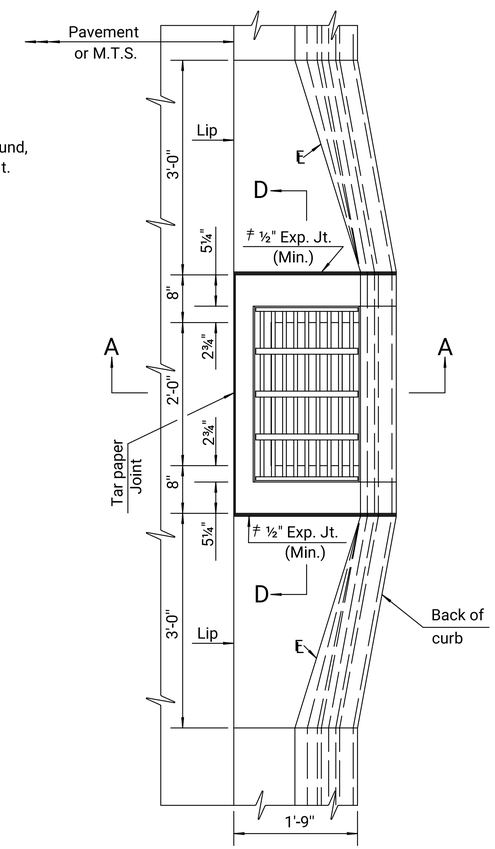


PLAN

| NO. | DATE | REVISIONS | BY | APP'D |
|---|---|---|---|---|
| 11 | 10-31-17 | Joint Filler Type C Added | A.L.R. | S.W.K. |
| 10 | 01-28-05 | Changed Class to Grade concrete | S.W.K. | J.O.B. |
| 09 | 03-02-99 | Added hot dipped galvanized option. | R.J.S. | J.O.B. |

KANSAS DEPARTMENT OF TRANSPORTATION

INLET, GUTTER, (SPECIAL)
TYPE III, (8" CURB)

RD647

| | | | |
|---|---|---|---|
| FHWA APPROVAL | | 03-05-18 | APP'D. Scott W. King |
| DESIGNED | DETAILED | QUANTITIES | TRACED |
| DESIGN CK. | DETAIL CK. | QUAN.CK. | TRACE CK. |

KDOT Graphics Certified 05-16-2022 Sh. No. 0

KDOT Graphics Certified

Plotted by : KDOT#CADD.Support_ks.gov 18-JUN-2022 00:39
File : rd647.dgn