STATE	PROJECT NO.	YEAR	SHEET NO.	TOTAL SHEETS
KANSAS		0	0	

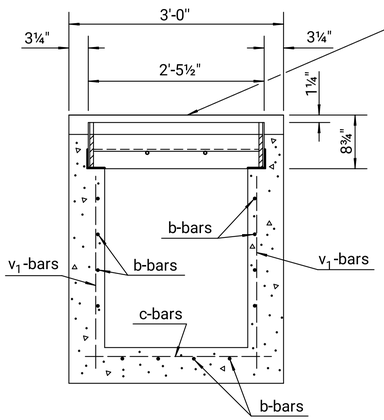

SECTION D-D

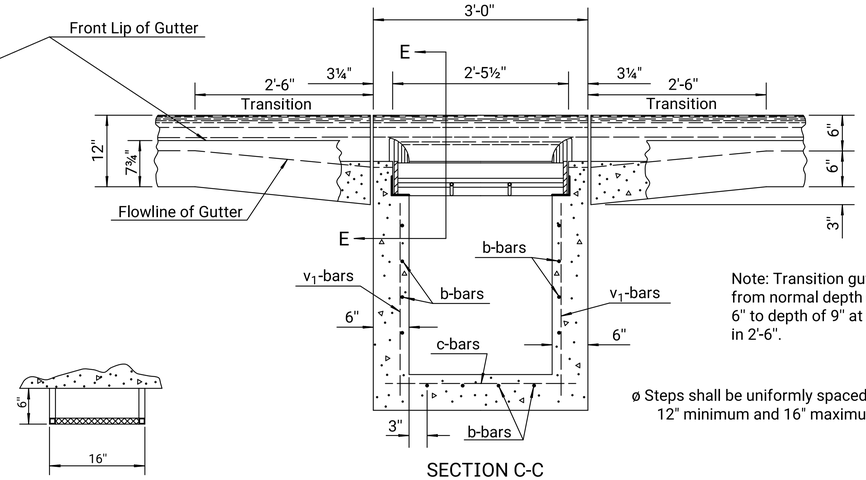

SECTION C-C

Note: Transition gutter from normal depth of 6" to depth of 9" at inlet in 2'-6".

ø Steps shall be uniformly spaced. Spacing shall be 12" minimum and 16" maximum.

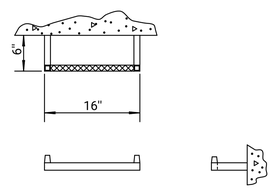

STEP DETAILS

Note: All reinforcing shall be #4 at 6" centers except where noted. Minimum clear distance to reinforcement shall be 1".

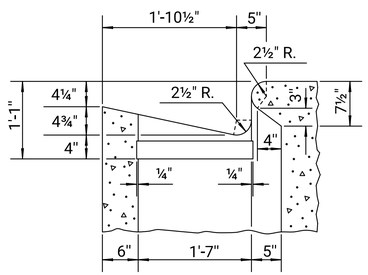

SECTION E-E

Reinforcing steel not shown.

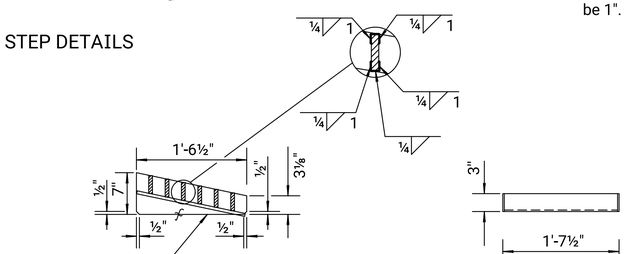

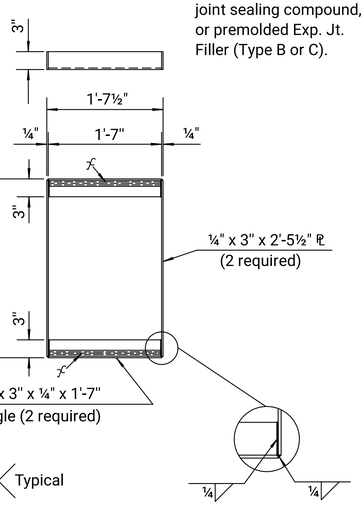

≠ Hot or cold poured joint sealing compound, or premolded Exp. Jt. Filler (Type B or C).

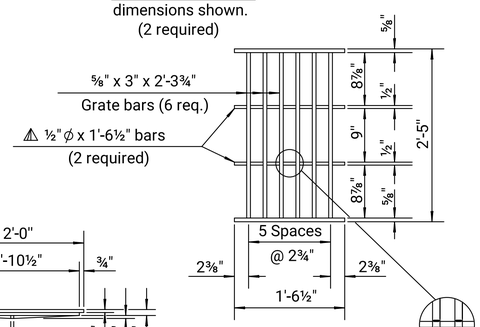

GRATE AND FRAME

Welded Structural Steel Grate & Frame
⚠ Weight = 152 lbs. Each (With Cross-bars)

Note: To prevent grate from rocking on bearing angles, machine finish surfaces indicated thus: "≠".

⚠ On all interstate projects and rural area projects, the two ½"ϕ x 1'-6½" bars are to be omitted. The weight of the grate and frame without these bars is 150 lbs. of structural steel.

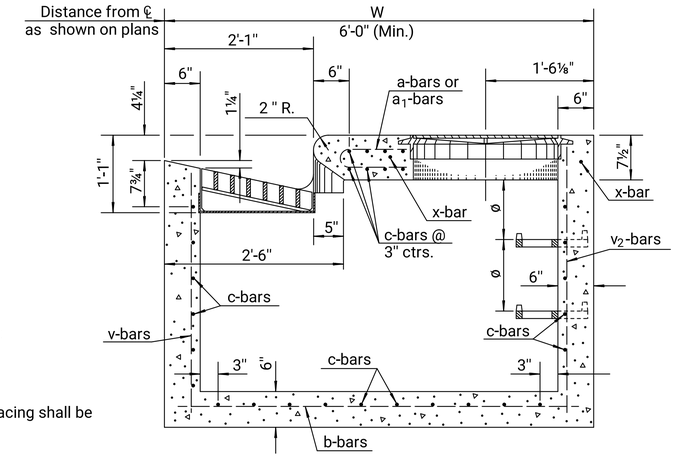

SECTION A-A

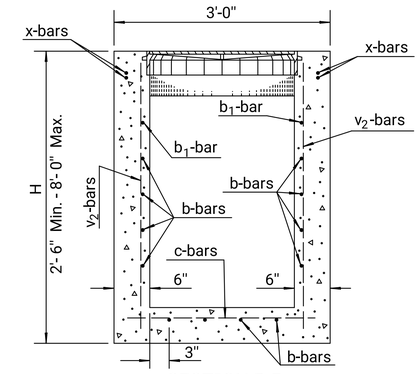

SECTION B-B

Notes:

Concrete Grade 3.0, Concrete Grade 3.0 (AE), or the mix used in Concrete Pavement, at the Contractor's option, shall be used throughout.

All exposed edges shall be finished with an edging tool.

Reinforcing bars shall be bent around pipe.

No reduction in concrete quantities shall be made for pipe openings.

When directed by the Engineer, a small opening in the back of the inlet shall be provided in order to drain a low area. Reinforcing bars shall extend through the opening. No reduction in concrete quantities will be made for this opening.

When directed by the Engineer, the top of the inlet shall be sloped slightly to approximately fit the ground line or other conditions.

The floor of the inlet shall be shaped as shown in various "EXAMPLES" on Reinforced Concrete Manhole Standard Drawing RD633.

No addition in concrete quantities shall be made for shaping floor of inlet.

No reduction in pay length of curb, gutter, or curb & gutter will be made through the inlet area.

All exposed structural steel shall be painted with a coat of inorganic zinc primer and then with a topcoat or a field coat of organic zinc, each coat to be 3 to 4 mils. As an alternate, the grate and frame may be hot dip galvanized after fabrication in accordance with the Standard Specifications.

All structural steel shall comply with ASTM A-36, A-242, or A-441.

All castings shall be gray iron and shall comply with the KDOT Standard Specifications.

The weight of castings includes no allowance for fillets and overruns.

Curb and Gutter sections shall be shaped as shown where required by the installation of curb inlets. This work shall be subsidiary to other bid items.

See sheet entitled "Reinforcing Steel for Inlets and Manholes" for details and quantities.

Steps shall be installed in all storm sewer inlets when specified in the plans or when "H" is equal to or greater than six feet. Steps shall comply with the requirements of the KDOT Standard Specification.

For additional notes and details on Light Type Cast Iron Manhole Cover and Ring Type C, and Cast Iron Steps, see Std. Drawing RD633 "Reinforced Concrete Manhole."

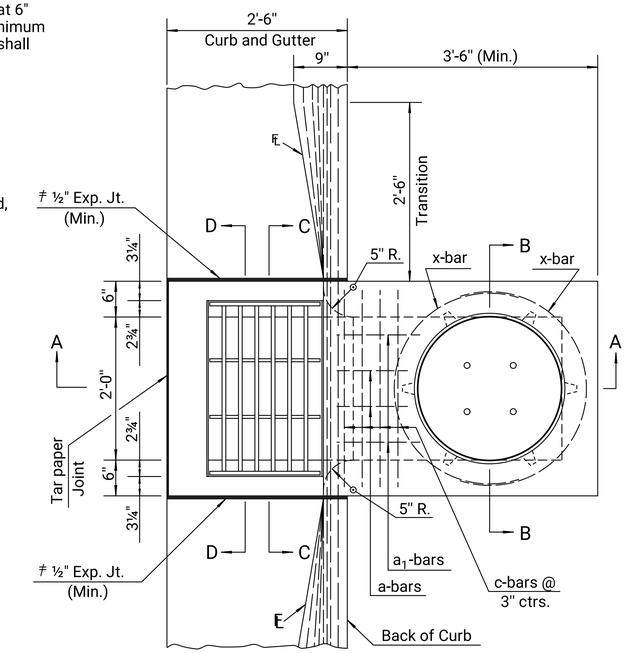

PLAN AND PART SECTION

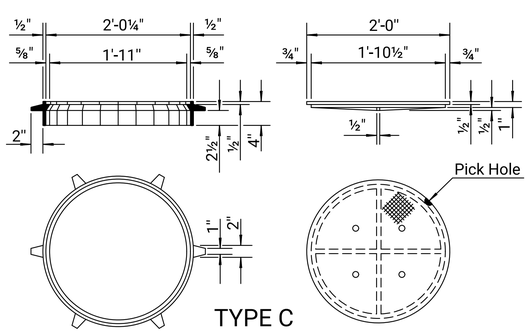

TYPE C

CAST IRON MANHOLE RING
Weight = 53 lbs.

CAST IRON MANHOLE COVER
Weight = 64 lbs.

LIGHT TYPE MANHOLE COVER & RING

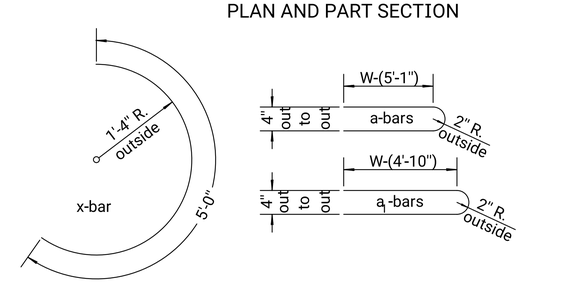

BENDING DIAGRAMS

NO.	DATE	REVISIONS	BY	APP'D
14	10-31-17	Joint Filler Type C Added	A.L.R.	S.W.K.
13	01-28-05	Changed Class to Grade concrete	S.W.K.	J.O.B.
12	03-02-99	Added hot dipped galvanized option.	R.J.S.	J.O.B.

KANSAS DEPARTMENT OF TRANSPORTATION

TYPE 1 2 CURB INLET

RD643

FHWA APPROVAL	03-05-18	APP'D.	Scott W. King
DESIGNED	DETAILED	QUANTITIES	TRACED
DESIGN CK.	DETAIL CK.	QUAN.CK.	TRACE CK.

KDOT Graphics Certified 05-16-2022 Sh. No. 0

KDOT Graphics Certified

Plotted by : KDOT#CADD.Support_ks.gov 18-JUN-2022 00:36
File : rd643.dgn