STATE	PROJECT NO.	YEAR	SHEET NO.	TOTAL SHEETS
KANSAS		0	0	

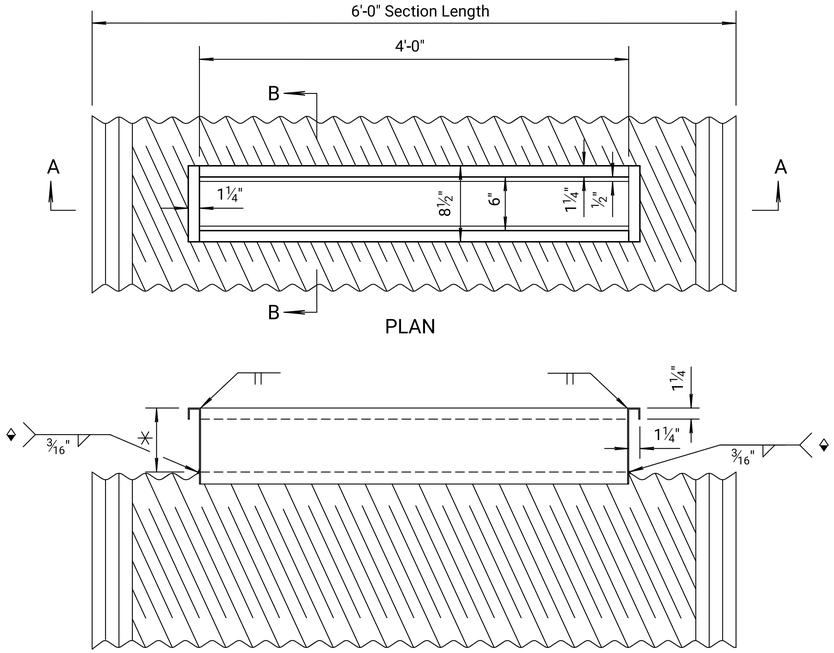

PLAN

✳See table for height and gauge of slot opening.

◆ Weld as shown for either Section B-B or Section C-C.

SECTION A-A

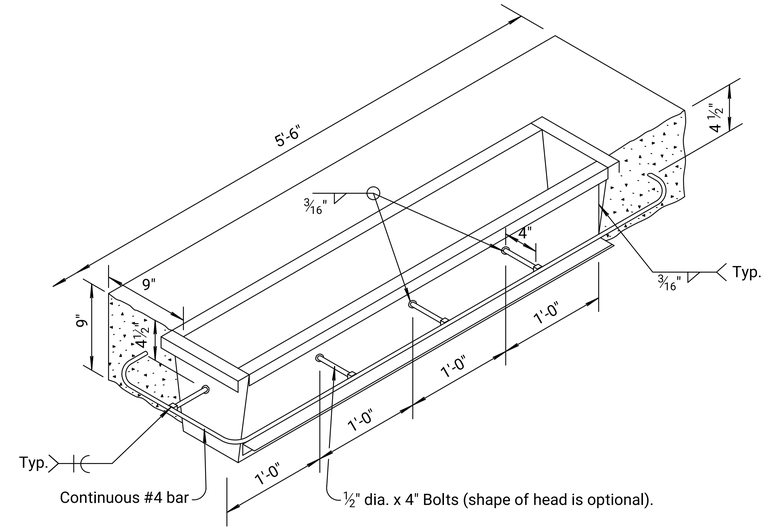

DETAIL OF RISER
(With studs and concrete pad)

Note: Concrete pad with continuous #4 bar and studs to be constructed with either riser method.

GENERAL NOTE

Culvert "Type" may be CSP, ACSP or CAP within guidelines of KDOT Pipe Policy for geographic location. More than one pipe "Type" may be acceptable for a design location with allowable types listed for each site. Culvert and PID shall both be compatible material type.

Any damage that may be incurred to the galvanized or aluminized pipe/PID coating shall be touched up with a zinc based paint.

See Standard Drawing RD660 for additional pipe information.

CAP or ACSP pipe/PID shall be coated with an asphaltic paint when in contact with fresh concrete in accordance with the Standard Specifications.

Gain in pipe length due to fit of pipe at connecting band shall not be paid for.

The unit price for "Interception Device" shall be full compensation for placing all materials, for all labor, excavation, backfilling, equipment, tools and incidentals necessary to complete the work.

The concrete pad is subsidiary to the slot assembly (PID) and pipe.

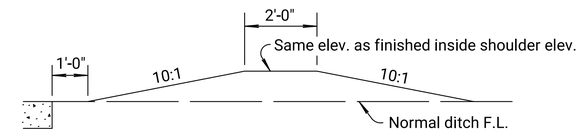

DITCH PLUG

An earth dike, as shown above, shall be constructed across the median ditch, downstream from each Pre-Fab Interception Inlet, where no other plug is used.

Alignment of the earth dike shall be parallel to the axis of the inlet unless otherwise shown on the plans.

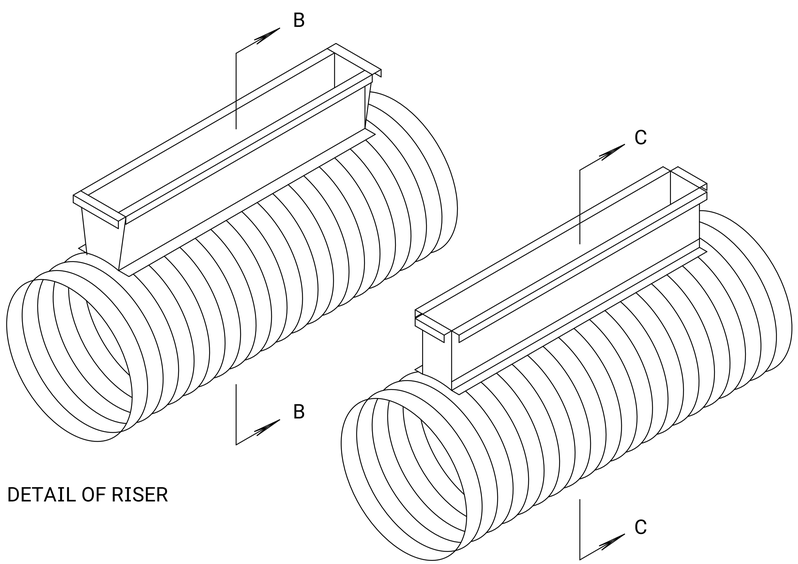

DETAIL OF RISER

DETAIL OF RISER
ALTERNATE METHOD

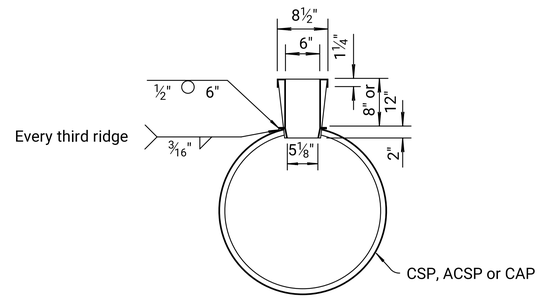

SECTION B-B

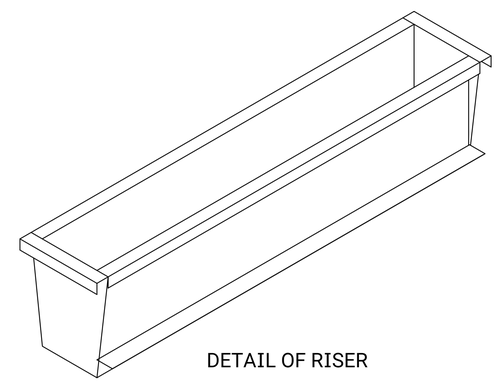

DETAIL OF RISER

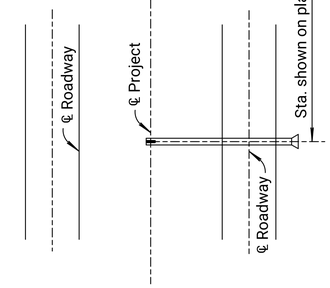

ROADWAY VIEW

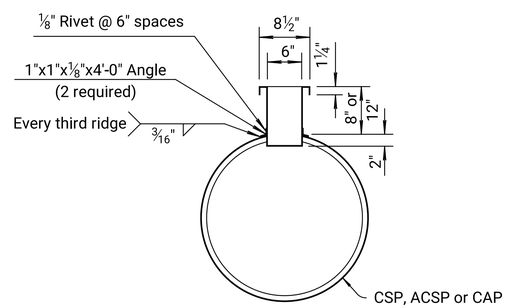

SECTION C-C
ALTERNATE METHOD

HEIGHT OF GAUGE AND RISER OPENING			
TYPE	HEIGHT	GAUGE	REMARKS
A	12"	12	Studs & conc. pad
B	8"	12	Studs & conc. pad
C	12"	12	Bituminous coated

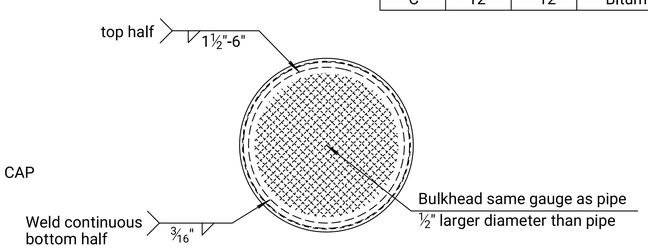

END BULKHEAD

NO.	DATE	REVISIONS	BY	APP'D
02	05-02-08	Redone for clarity and pipe policy	R.J.S.	J.O.B.
01	04-14-92	Entered on CADD	R.J.S.	J.O.B.

KANSAS DEPARTMENT OF TRANSPORTATION

PRE-FAB
INTERCEPTION DEVICE
(STEEL)

RD640

FHWA APPROVAL		06-27-08	APP'D. James O. Brewer
DESIGNED	DETAILED	QUANTITIES	TRACED
DESIGN CK.	DETAIL CK.	QUAN.CK.	TRACE CK.

KDOT Graphics Certified 05-16-2022 Sh. No. 0

KDOT Graphics Certified

Note to Designer: KDOT Pipe Policy provides guidance in identifying the prohibited and/or restricted uses of CSP, ACSP, PEP, PVCP, CAP & RCP. Provide end sections of the same type and coating as the pipe. Exceptions to this are noted in the Standard Specifications. Refer to the KDOT Design Manual, Volume I (Part C), Road Section, "Elements of Drainage & Culvert Design" for structural pipe design information which includes: corrugations, sizes, gauges, maximum/minimum fill heights and classes of pipe.

Plotted by : KDOT#CADD.Support_ks.gov 18-JUN-2022 00:34
File : rd640.dgn