STATE	PROJECT NO.	YEAR	SHEET NO.	TOTAL SHEETS
KANSAS		0	0	

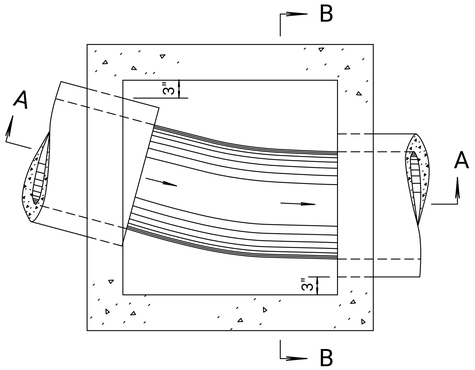

PLAN - FLOOR (Example I)

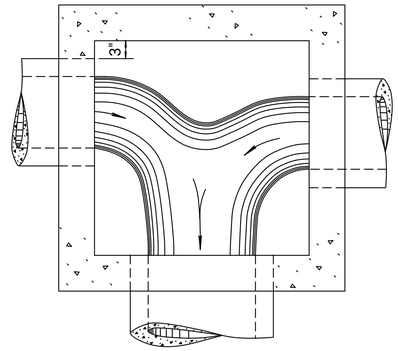

PLAN - FLOOR (Example III)

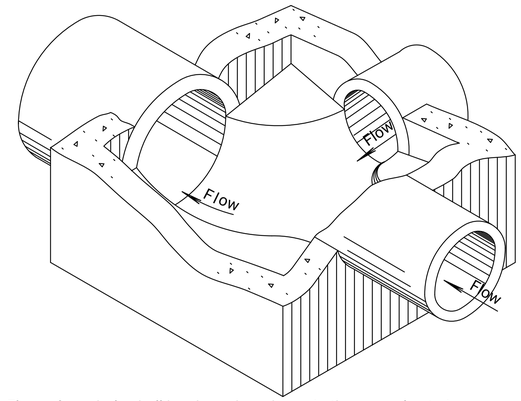

Floor of manhole shall be shaped as shown in the examples to increase hydraulic efficiency.

ISOMETRIC VIEW (Example IV)

Note: Use Concrete Grade 3.0 throughout. All exposed edges shall be finished with an edging tool.

At the contractors option Concrete Grade 3.0 (AE) or mix used in concrete pavement may be used throughout.

In general, pipes will enter and leave manhole at various positions. Where possible bend bars around pipes.

Floor of manhole shall be shaped as shown in various "EXAMPLES" with unreinforced Concrete Grade 3.0.

Manhole opening and steps, where used, shall be placed to afford easy access to top of shaped invert. Top reinforcing bars shall be adjusted accordingly.

All castings shall be gray iron and shall comply with the KDOT Standard Specifications.

No deductions in concrete quantities shall be made for pipe openings or additions to concrete quantities shall be made for shaping floor of manholes.

The top of the manhole shall be sloped slightly to approximately fit the ground line or other condition as directed by the Engineer.

Dimensions and weights of cast iron as shown on this sheet are minimum. Larger dimensions and/or heavier weights of cast iron may be used.

The Contractor has the option of using precast manholes, as approved by the Engineer.

Steps shall be installed in all manholes when specified in the plans or when "H" is equal to or greater than six feet. Steps shall comply with the requirements of the KDOT Standard Specification.

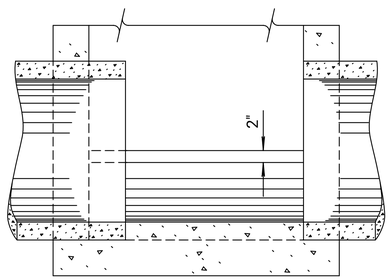

SECTION A-A (Example I)

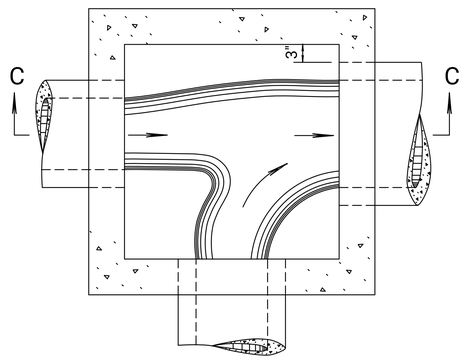

PLAN - FLOOR (Example IV)

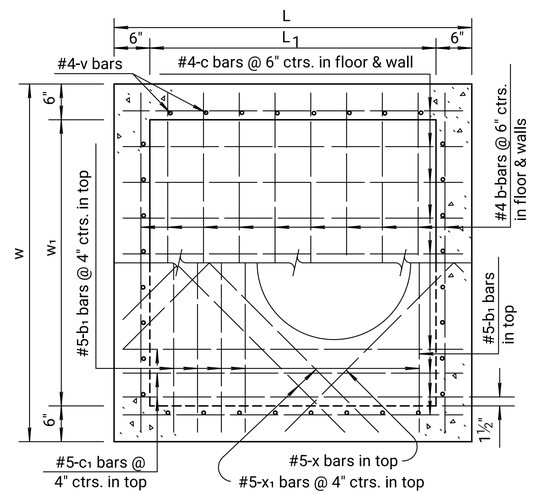

PLAN (Showing top & floor reinf.)

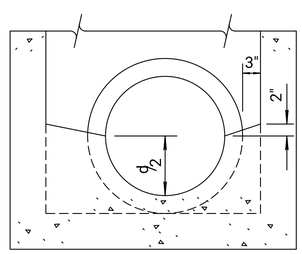

SECTION B-B (Example I)

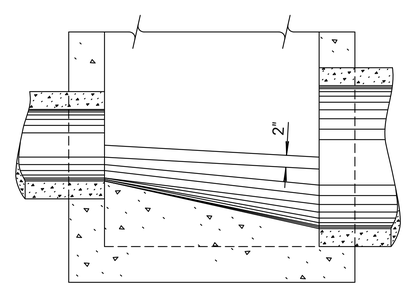

SECTION C-C (Example IV)

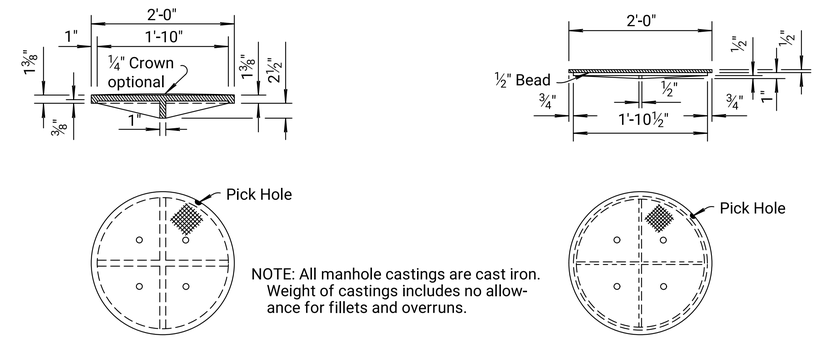

NOTE: All manhole castings are cast iron. Weight of castings includes no allowance for fillets and overruns.

MANHOLE COVER TYPE A & B
(Weight=134 lbs.; without ¼" Crown= 125 lbs.)

MANHOLE COVER TYPE C
(Weight= 64 lbs.)

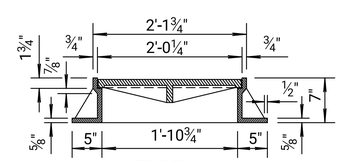

TYPE A

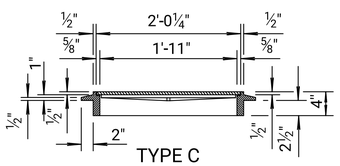

TYPE C

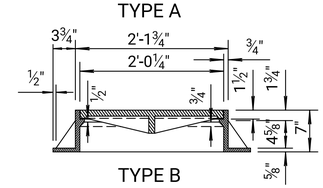

TYPE B

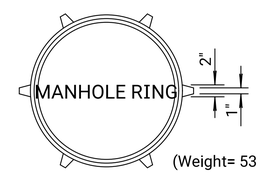

(Weight= 53 lbs.)

* LIGHT TYPE
MANHOLE COVER & RING

*Rings with four equally spaced lugs will be permitted.

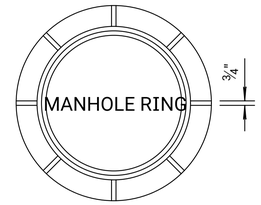

(Type A Ring= 192 lbs., Type B Ring= 198 lbs.)

HEAVY TYPE
MANHOLE COVER AND RING

Note: Either Type A or Type B may be used.

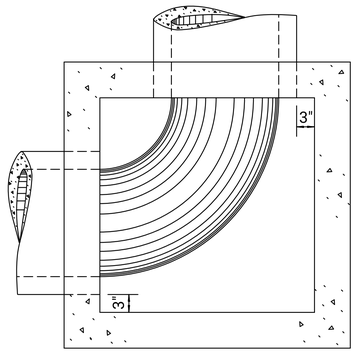

PLAN - FLOOR (Example II)

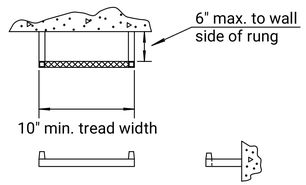

STEP DETAILS

ø Steps shall be uniformly spaced. Spacing shall be 12" minimum and 16½" maximum.

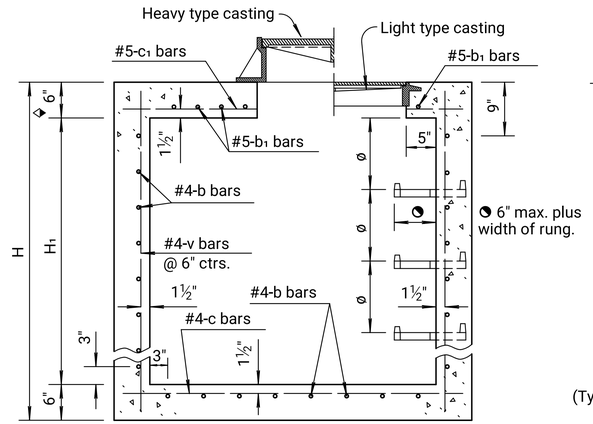

◆ Where dimension "L" or "W" is greater than 6'-0" use 8" slab thickness.

SECTION (Exclusive of floor shaping)

NO.	DATE	REVISIONS	BY	APP'D
32	07-17-17	Changed step dimensions	A.L.R.	S.W.K.
31	01-28-05	Changed Class to Grade concrete	S.W.K.	J.O.B.
30	12-12-97	Revised step spacing	R.J.S.	J.O.B.

KANSAS DEPARTMENT OF TRANSPORTATION

REINFORCED
CONCRETE MANHOLE

RD633

FHWA APPROVAL	08-09-17	APP'D.	Scott W. King
DESIGNED	DETAILED	QUANTITIES	TRACED
DESIGN CK.	DETAIL CK.	QUAN.CK.	TRACE CK.

KDOT Graphics Certified 05-16-2022 Sh. No. 0

KDOT Graphics Certified

Plotted by : KDOT#CADD.Support_ks.gov 18-JUN-2022 00:28
File : rd633.dgn