STATE	PROJECT NO.	YEAR	SHEET NO.	TOTAL SHEETS
KANSAS	0	0	0	0

Note: Guardrail is shown with wood posts. However the contractor has the option of providing wood or steel posts. See Standard Drawing RD611 for details.

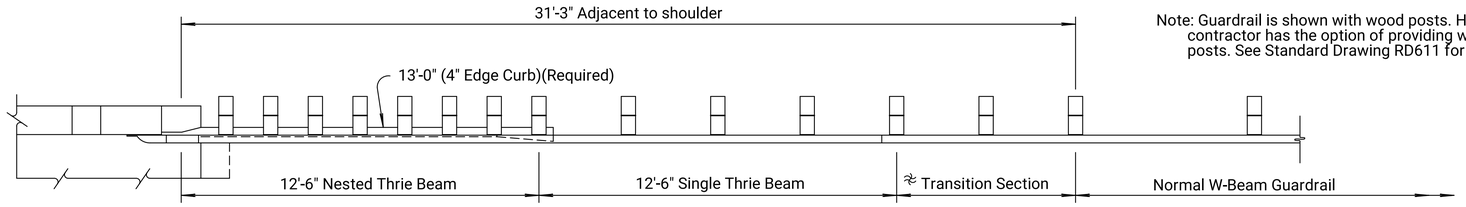

PARTIAL PLAN

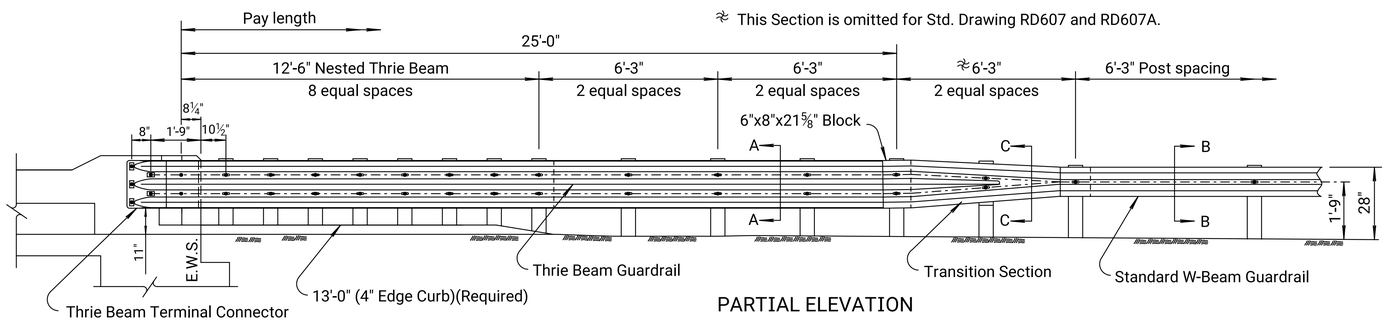

PARTIAL ELEVATION

GENERAL NOTE

Use galvanized 12 gauge steel rail elements unless otherwise noted. Use galvanized anchor bolts and post rail fittings, see Standard Specifications. Supply guard rail parts that are interchangeable with similar parts regardless of source or manufacturer.

Fabricate Terminal Connector from 10 gauge steel, see standard specification. The connector has the same section as thrie beam guardrail Terminal connector is subsidiary to the bid item "Steel Plate Guardrail".

Shop curve rails when radius is less than 150'.

Lap guardrail splices, including terminal connector, in the direction of traffic. Where traffic is temporarily carried in the opposite direction of final configuration, lap rail splices in the direction of permanent traffic.

Bridge to guardrail transition consists of 1- 25'-0" Thrie beam with 1- 12'-6" Thrie beam section nested in back of 25'-0" section (see layout), & 1- Thrie beam to W-beam Asymmetrical transition section. Use associated hardware with post spacing shown. Use w-beam guardrail with 6'-3" post spacing with rail furnished in 12'-6" or 25'-0" sections.

All material and work required for this installation are paid under the bid item "Steel Plate Guardrail".

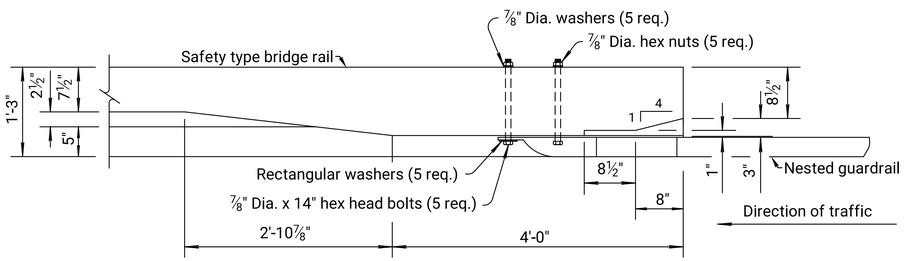

PLAN VIEW

GUARDRAIL ATTACHMENT
TO SAFETY SHAPE BRIDGE RAIL

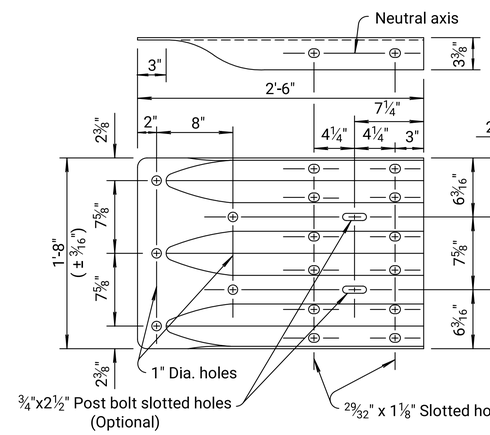

TERMINAL CONNECTOR

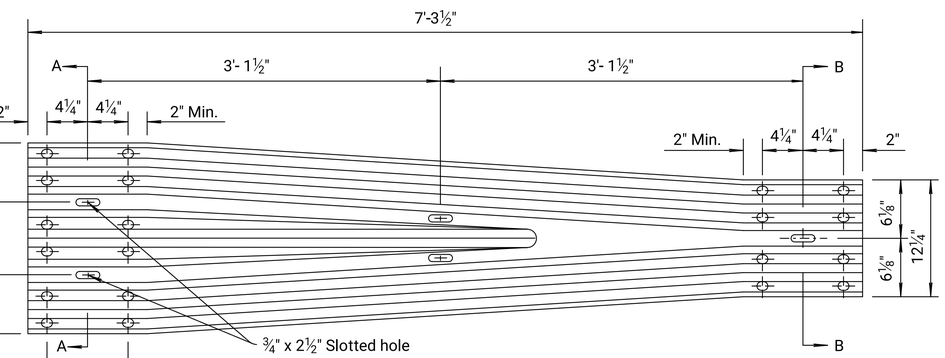

ELEVATION
TRANSITION SECTION

(From Thrie Beam to W-Beam rail)

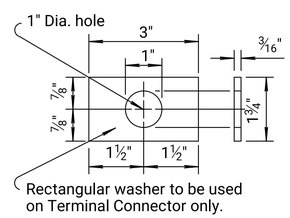

RECTANGULAR WASHER

(Other approved washer may be used.)

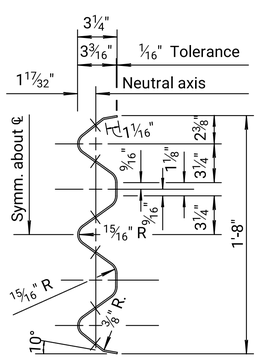

SECTION A-A THRU RAIL ELEMENT
TYPICAL THRIE BEAM

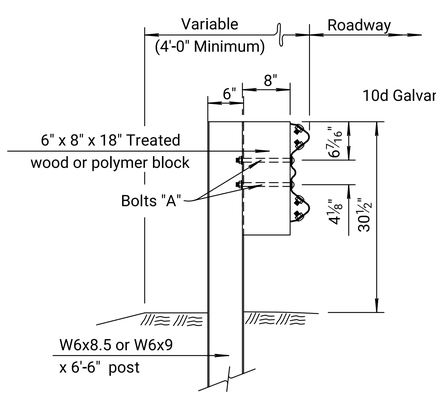

SECTION C-C (Steel Post)

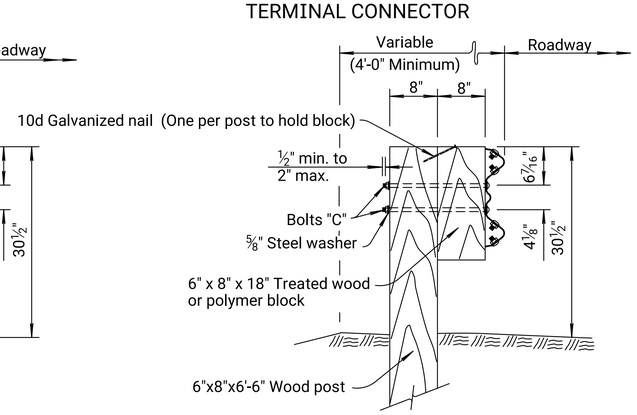

SECTION C-C (Wood Post)

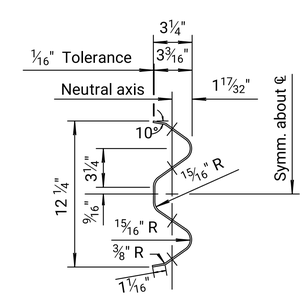

SECTION B-B THRU RAIL ELEMENT
TYPICAL W-BEAM

NO.	DATE	REVISIONS	BY	APP'D.
13	12-06-10	Rev. Sec. C-C, notes & 28" rail height	S.W.K.	J.O.B.
12	07-02-09	Rev. Safety Shape Br. Rail detail	S.W.K.	J.O.B.
11	01-05-04	Added 4' Edge Curb, revised note	S.W.K.	J.O.B.

KANSAS DEPARTMENT OF TRANSPORTATION

DETAILS OF THRIE BEAM GUARDRAIL (CGS) TRANSITION

RD613

FHWA APPROVAL	01-11-11	APP'D.	James O. Brewer
DESIGNED	DETAILED	QUANTITIES	TRACED
DESIGN CK.	DETAIL CK.	QUAN.CK.	TRACE CK.

KDOT Graphics Certified 04-29-2026 Sh. No. 0

KDOT Graphics Certified

Plotted by : Amy.Rockers@ks.gov 2-JUN-2026 21:02
File : rd613.dgn