STATE	PROJECT NO.	YEAR	SHEET NO.	TOTAL SHEETS
KANSAS		0	0	

TABLE OF DIMENSIONS AND QUANTITIES

Station	Side	Dist. to ℄	Inlet	Outlet	Angle		Slope	W	W_1	S	S_1	Length			Total Length	Dia.	Type CSP/ACSP/CAP	Pipe Gauge		Pipe Corrugations		Conc. Cu. Yds.	Steel Lbs.	Remarks
					a	b						L_1	L_2	L_3				CS/ACS	CA	CS/ACS	CA			

GENERAL NOTE

Culvert "Type" may be CSP, ACSP or CAP within guidelines of KDOT Pipe Policy for geographic location. More than one pipe "Type" may be acceptable for a design location with allowable types listed for each site.

Any damage that may be incurred to the galvanized or aluminized pipe coating shall be touched up with a zinc based paint.

Inlet Headwall shall be located outside the Clear Zone when not in areas protected by Safety Barrier.

See Standard Drawing RD660 for additional pipe information.

CAP or ACSP pipe shall be coated with an asphaltic paint when in contact with fresh concrete in accordance with the Standard Specifications.

Gain in pipe length due to fit of pipe at connecting band shall not be paid for.

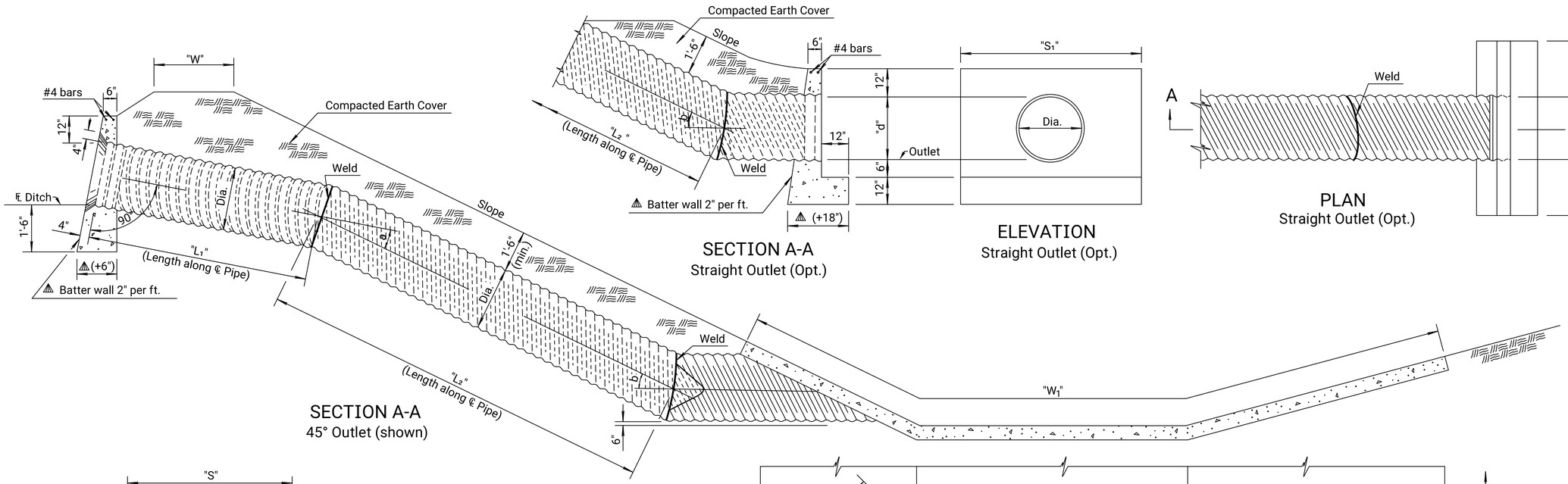

SECTION A-A
Straight Outlet (Opt.)

SECTION A-A
45° Outlet (shown)

ELEVATION
Straight Outlet (Opt.)

PLAN
Straight Outlet (Opt.)

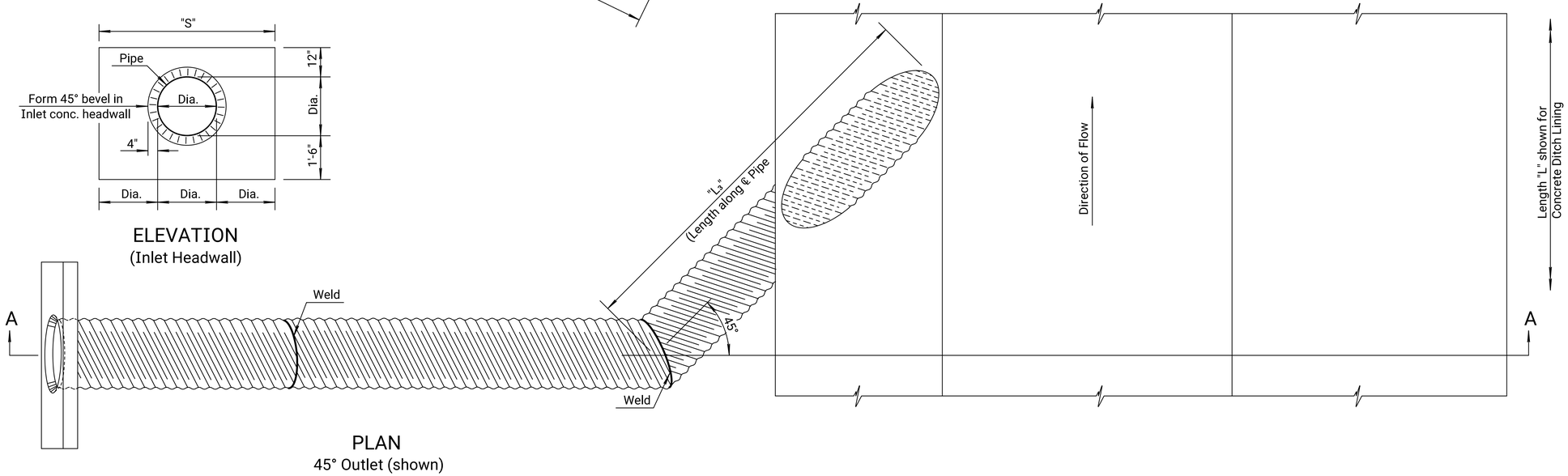

ELEVATION
(Inlet Headwall)

PLAN
45° Outlet (shown)

NO.	DATE	REVISIONS	BY	APP'D
12	04-24-08	Redone for clarity and pipe policy	S.W.K.	J.O.B.
11	02-24-94	Eliminate Redundant Dimensions	R.J.S.	J.O.B.
10	10-23-92	Input in CADD system	R.J.S.	J.O.B.

KANSAS DEPARTMENT OF TRANSPORTATION

EROSION PIPE

RD510

FHWA APPROVAL	05-28-08	APP'D.	James O. Brewer
DESIGNED	DETAILED	QUANTITIES	TRACED
DESIGN CK.	DETAIL CK.	QUAN.CK.	TRACE CK.

KDOT Graphics Certified 04-15-2022 Sh. No. 0

KDOT Graphics Certified

Note to Designer: KDOT Pipe Policy provides guidance in identifying the prohibited and/or restricted uses of CSP, ACSP, PEP, PVCP, CAP & RCP. Provide end sections of the same type and coating as the pipe. Exceptions to this are noted in the Standard Specifications. Refer to the KDOT Design Manual, Volume 1 (Part C), Road Section, "Elements of Drainage & Culvert Design" for structural pipe design information which includes: corrugations, sizes, gauges, maximum/minimum fill heights and classes of pipe.

Plotted by : KDOT#CADD.Support_ks.gov 11-JUN-2022 00:10
File : rd510.dgn