STATE	PROJECT NO.	YEAR	SHEET NO.	TOTAL SHEETS
KANSAS	0	0	0	0

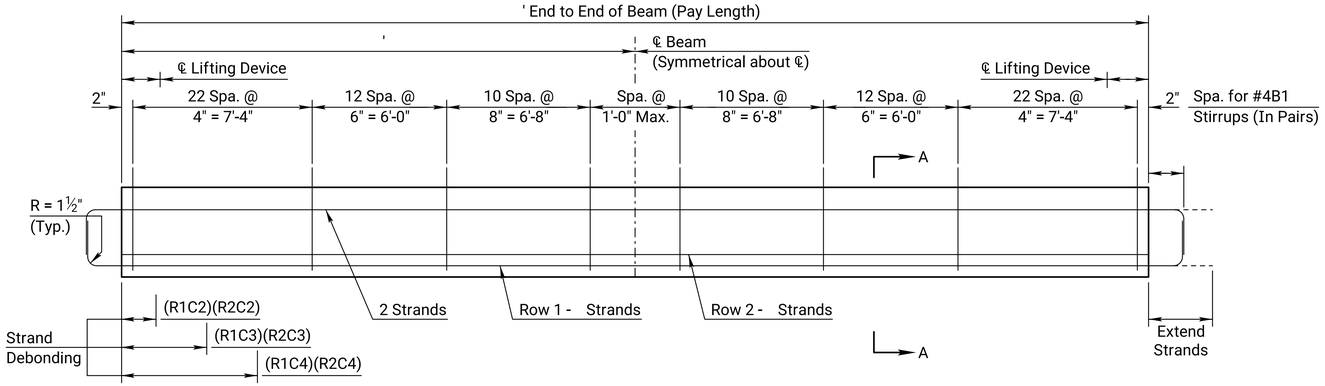

TYPICAL BEAM ELEVATION TYPE IT400 BEAM SPANS &

NOTE TO DESIGNER (TO BE REMOVED):
Adjust design and spacing of #4B1 bars to conform to actual beam lengths.

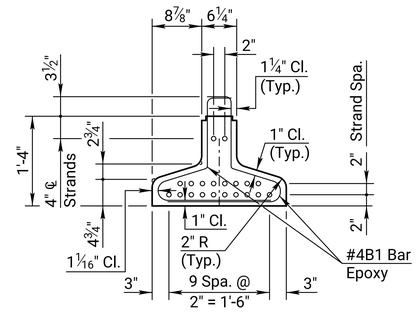

SECTION A-A

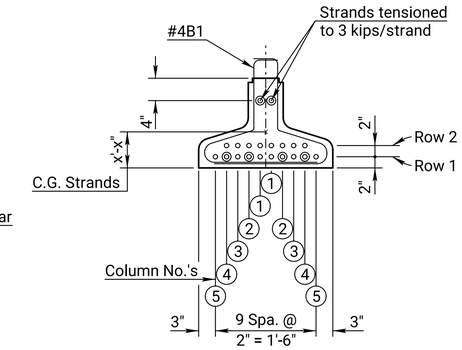

STRAND SPACING

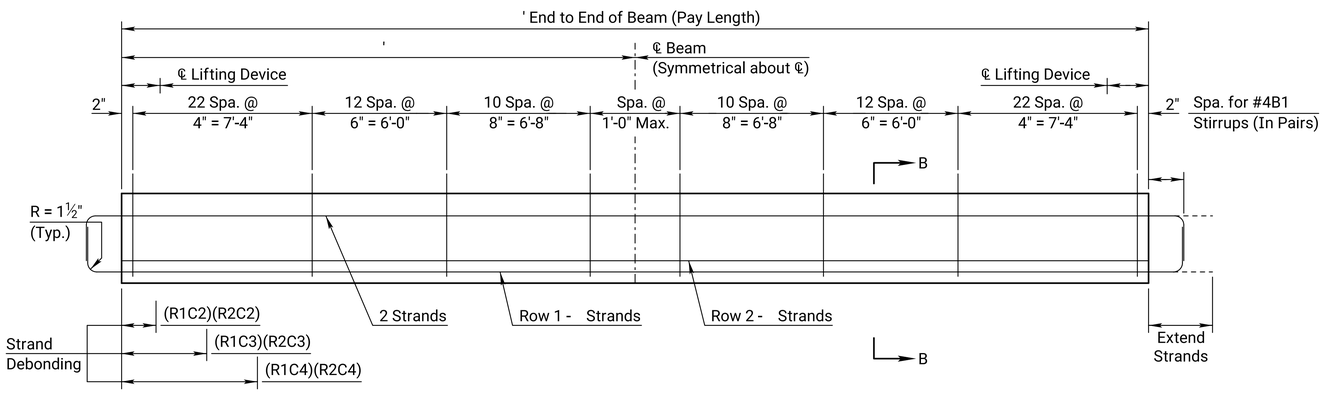

TYPICAL BEAM ELEVATION TYPE IT400 BEAM SPANS &

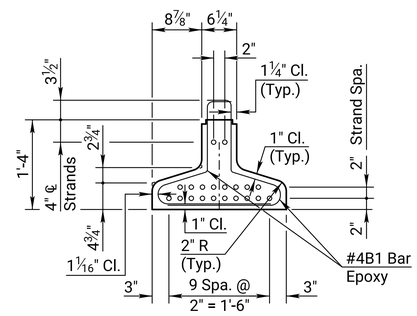

SECTION B-B

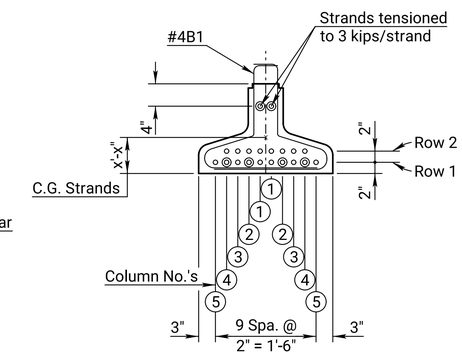

STRAND SPACING

NOTE: During transportation and construction only, support beams on bearing points a maximum of ft. from the beam end. The Fabricator shall show the proposed support locations on the shop drawings.

NOTE: All Reinforcing Steel shall be epoxy coated. See General Notes on the "Standard Prestressed Concrete Inverted Tee Section Details" sheet for galvanized welded deformed wire reinforcement substitution.

NOTE: Extend x circled strands x'-x" beyond the end of the beam. Strands not circled shall be cut flush with the end of the beam. Typical at both ends. See "Strand Spacing" details this sheet.

BILL OF REINFORCING STEEL			
Beam (1 Listed - Reqd.) (End Spans)			
EPOXY COATED			
Mark	No.	Size	Length
B1		#4	4'-2"
Beam (1 Listed - Reqd.) (Interior Spans)			
EPOXY COATED			
Mark	No.	Size	Length
B1		#4	4'-2"

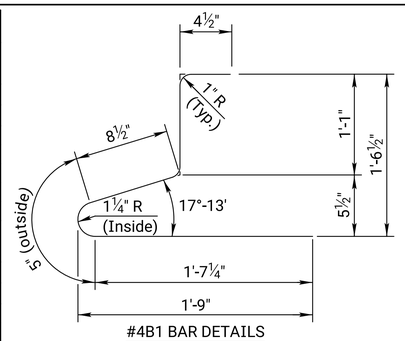

#4B1 BAR DETAILS
(In Pairs)
Length = 4'-2"

BILL OF MATERIAL		
Item	Unit	Quantity
Prestressed Concrete Beams (Inverted T) (400) End Spans	Lin.Ft.	
Prestressed Concrete Beams (Inverted T) (400) Interior Spans	Lin.Ft.	
The following quantities are given for information only and shall not be paid for directly but shall be made subsidiary to the bid item "Prestressed Concrete Beams (Inverted T) (400)"		
Beam Concrete (f'c= xxxx psi) (per end span beam)	Cu.Yds.	
Beam Concrete (f'c= xxxx psi) (per interior span beam)	Cu.Yds.	
Approximate Weight per x'-x" Beam	Tons	
Approximate Weight per x'-x" Beam	Tons	
½" ø Prestressing Strand (Gr. 270 low relaxation)	Lin.Ft.	
Reinforcing Steel (Gr. 60) (Epoxy Coated)	Lbs.	
Elastomeric Brg. Pads (X" x X" x 1'-10")	Each	
Lifting Devices	Each	
Bearing Plates (½" x 1'-9" x 1'-10")	Each	

NOTES TO DESIGNER (TO BE REMOVED):

1. Design the number and location of strands within the template shown. The minimum number of strands to be used regardless of section or length is: Row 1, strands in columns 2, 4, and 5 (R1C2, R1C4, and R1C5) for a total of 6 strands in Row 1 in addition to the 2 strands in the top row.
2. Determine the number and length of debonded strands. The number of debonded strands in any row shall not exceed 40% of the strands in that row. The total number of debonded strands shall not exceed 25% of the total number of strands. The exterior strands in each row shall be fully bonded.
3. Minimum number of strands to be extended: R1C2 and R1C4 for a total of 4 in Row 1 in addition to the 2 strands in the top row.

NO.	DATE	REVISIONS	BY	APP'D
03				
02	03-03-10	Added Bearing Plate	J.P.J.	K.F.H.
01	05-26-05	Current Release	R.A.M.	K.F.H.

KANSAS DEPARTMENT OF TRANSPORTATION

Br. No. 0-0- () Sta.

IT400 BEAM DETAILS

Proj. 0 Co.

DESIGNED	DETAILED	QUANTITIES	CADD
DESIGN CK.	DETAIL CK.	QUAN.CK.	CADD CK.

KDOT Graphics Certified 11-28-2022 Sh. No. 0

KDOT Graphics Certified

Plotted by : KDOT#CADD.Support_ks.gov 8-DEC-2022 01:02
File : br321.dgn