To be verified by designer.

STATE	PROJECT NO.	YEAR	SHEET NO.	TOTAL SHEETS
KANSAS		0	0	

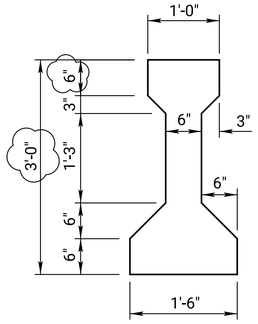

TYPE K2

Area	369 in.²
IcG	50,980 in.⁴
Y Bot	15.83 in.
Vol./Surf. Area	3.37 in.
Wt./Ft.	384 lbs.

TYPICAL BEAM SECTIONS

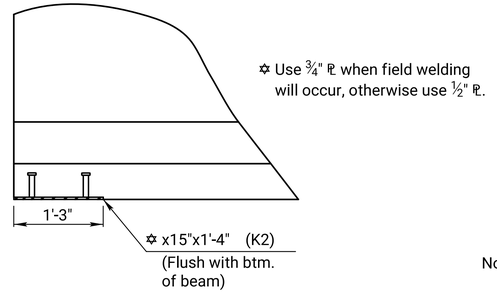

ELEVATION

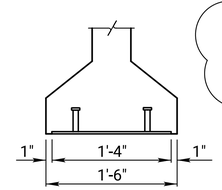

END VIEW
(K2 Beam)

Designer Notes: At deck drain locations or at unit breaks or areas where salt spray occurs; See bridge design manual for protection criteria.

Note: Stud welding will be in accordance with the latest edition of AWS D1.1.

Use plate conforming to the requirements of ASTM A709 Grade 36. The stud anchors will be made of material as specified for Shear Connector Studs in the KDOT Specifications.

The exposed surface of the bearing plates shall be galvanized.

All work and material to install the bearing plates shall be subsidiary to the bid item "Prestressed Concrete Beam".

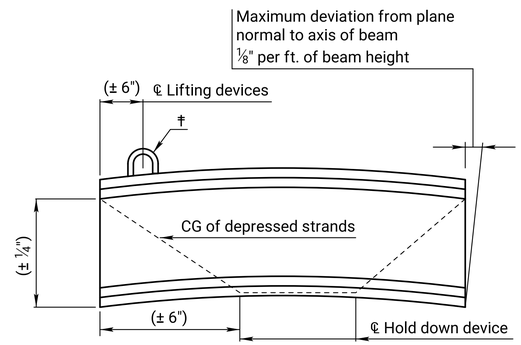

ELEVATION

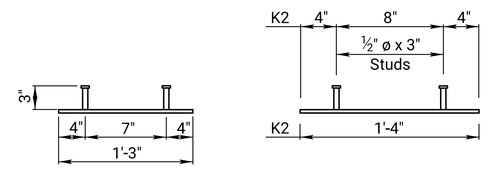

ELEV. OF BRG. PLATE

TYPICAL SECTION

BEARING PLATE DETAILS

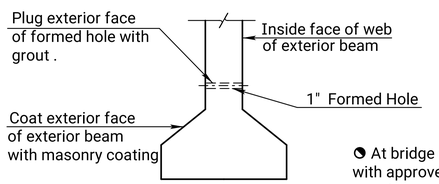

◔ At bridge deck drain locations coat beam with approved epoxy substructure waterproofing membrane.

◔◔ At expansion joint locations coat beam with approved epoxy substructure waterproofing membrane.

Note: Dimensions shown in parentheses are tolerances only.

CG = Center of Gravity

✱Prior to shipping, the camber shall be no greater than the design camber + ½". The design camber is equal to the 50 day camber shown in the plans.

DETAIL OF FORMED HOLE(S)
(See Beam Detail sheet for locations)

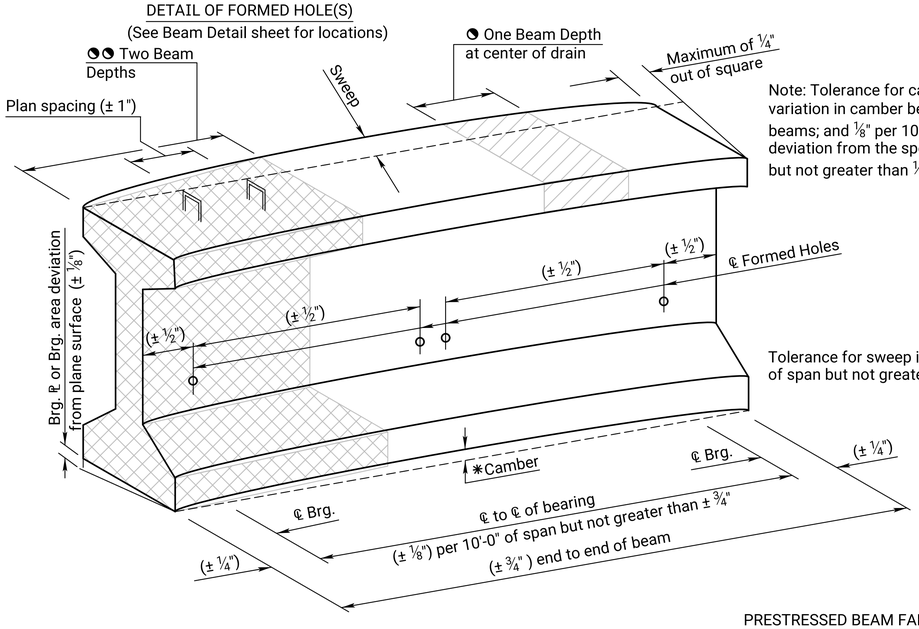

Note: Tolerance for camber is 1" maximum variation in camber between adjacent beams; and ⅛" per 10'-0" of span deviation from the specified camber but not greater than ½" deviation.

Tolerance for sweep is ⅛" per 10'-0" of span but not greater than 1".

PRESTRESSED BEAM FABRICATION TOLERANCES

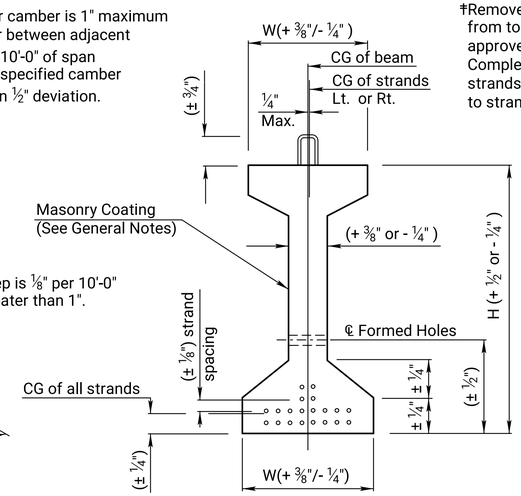

TYPICAL SECTION

‡Remove lifting device within ½" from top of beam. Coat area with approved epoxy bonding agent. Completely cover remaining exposed strands and fill depressions adjacent to strands with approved epoxy grout.

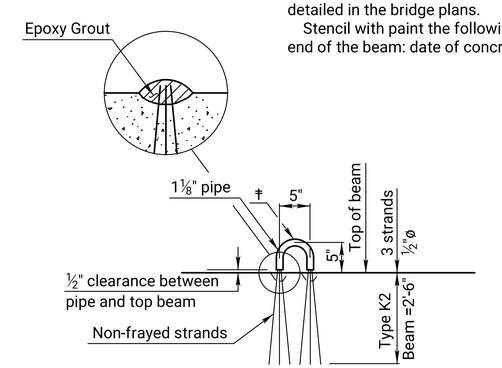

LIFTING DEVICE

GENERAL NOTES

Fabricate the precast prestressed beams in accordance with the KDOT Specifications. Submit shop drawings in accordance with the KDOT Specifications.

Use air entrained concrete. The KDOT Materials Section shall approve the mix design.

Unless otherwise shown on the plans, f'c = psi and f'c at release = psi.

Use reinforcing steel conforming to the requirements of ASTM A615, Grade 60. The reinforcing steel shown shall be uncoated unless otherwise indicated.

Use ½" nominal diameter (unless otherwise indicated), uncoated, seven-wire, low relaxation prestressing tendons conforming to the requirements of ASTM A416, Grade 270.

Use bolts having an ultimate strength 50% in excess of the manufacturer's safe load. All items (except the tendons) cast-in or inserted in prestressed beams shall be epoxy coated or galvanized. Show Formed Holes on shop drawings. All bolts, nuts and washers shall be subsidiary to the bid item, "Prestressed Concrete Beams".

Show on the shop drawings any hardware, holes or other appurtenances that are required to be incorporated into the girder to construct the girder or for any temporary works needed to construct the bridge (e.g. safety railing pockets).

After beams are in the final position, remove lifting devices. See "Lifting Device" detail below. Removal of the lifting devices, coating and grouting shall be subsidiary to the bid item: "Prestressed Concrete Beams".

Use elastomeric bearing pads conforming to the KDOT Specifications. Bearing pads and Type B expansion joint material shall be subsidiary to the bid item, "Prestressed Concrete Beams".

The beam lengths shown on the design plans are net lengths measured horizontally along the beam centerline. The beam manufacturer shall make necessary allowances for grade, and for shortening due to elastic shortening, creep and shrinkage.

The beams shall reasonably conform to the lines and dimensions shown on the design plans and be within the tolerances specified in the latest edition of Prestressed Concrete Institute's, "Manual for Quality Control for Plants and Production of Structural Precast Concrete Products", except as modified by this sheet or the KDOT Specifications.

Bevel all exposed edges of beams except the tops and ends with a ¾" triangular molding or round the edges to a ¾" radius. Round the angle of intersection between the web and the flanges.

Apply an initial force of 1,000 to 3,000 pounds to each strand to take up any slack in the cables. Unless otherwise noted on the plans, apply a force of 31,000 pounds to each strand. Stress harped strands to a magnitude such that they are tensioned to 31,000 pounds after they are in position.

Strike off level and apply a wire brush or stiff broom finish to the tops of the beams. Apply the finish transverse to the length of the beam. (Note: When using precast panels for deck construction, the outside 5" on each side of the top flange shall be finished smooth with a steel trowel.) At approximately the time of initial set, brush the top of the beam transversely with a coarse wire brush to remove all laitance.

Fill trapped air holes and surface voids on the exterior face of the exterior beams with an approved concrete masonry coating. This work shall conform to KDOT Specifications. This work shall be subsidiary to the bid item, "Prestressed Concrete Beams".

Detension strands in a sequence which minimizes lateral eccentricity. Show the method and sequence of strand release on the shop drawings. Use extreme care when lifting, handling, storing and transporting beams. Use the lifting system shown or an alternate system approved by the Engineer. Keep the beam in an upright position at all times. Support the beam on bearing points positioned directly below the designated lifting points or designated bearing points.

Do not place the bridge slab before the beams are 28 days old. Pour diaphragms as detailed in the bridge plans.

Stencil with paint the following information on the webs approximately 5'-0" from one end of the beam: date of concrete placement, date of strand release, and beam mark.

NO.	DATE	REVISIONS	BY	APP'D
06	08-16-18	Note Update	M.L.L.	J.P.J.
05	06-04-15	Define Beam Protection	J.P.J.	C.E.R.
04	02-21-12	Change Bearing Plate Thickness	J.P.J.	T.L.F.

KANSAS DEPARTMENT OF TRANSPORTATION

STANDARD PRESTRESSED CONCRETE BEAM DETAILS

BR300A

FHWA APPROVAL		10-11-10	APP'D.	Terry L. Fleck
DESIGNED	DETAILED	R.G.F.	QUANTITIES	TRACED
DESIGN CK.	DETAIL CK.	L.R.R.	QUAN.CK.	TRACE CK.

KDOT Graphics Certified 06-20-2022 Sh. No. 0

KDOT Graphics Certified

Plotted by : KDOT#CADD.Support_ks.gov 25-JUN-2022 00:13
File : br300a.dgn