STATE	PROJECT NO.	YEAR	SHEET NO.	TOTAL SHEETS
KANSAS	0	0	0	0

NOTE TO DESIGNER:
Section B-B and Section C-C details for Barrier without vertical joints (except at transitions) can be found in this dgn file.

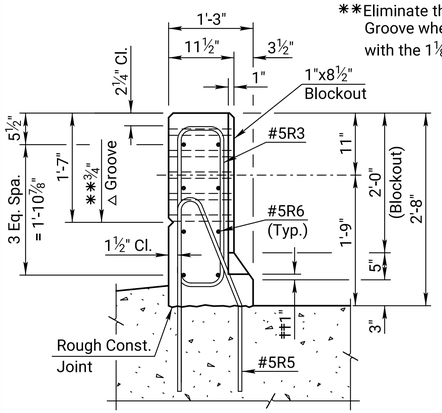

SECTION A-A
(At abutment)

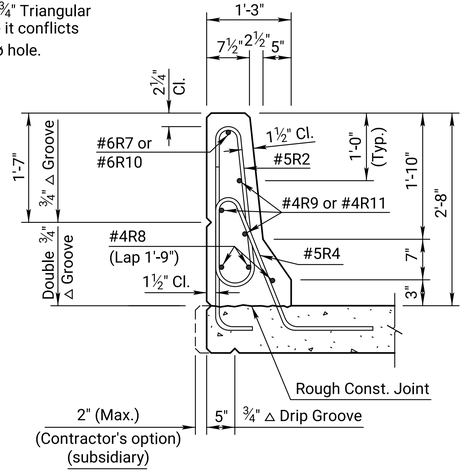

SECTION B-B
(2'-8" Section)

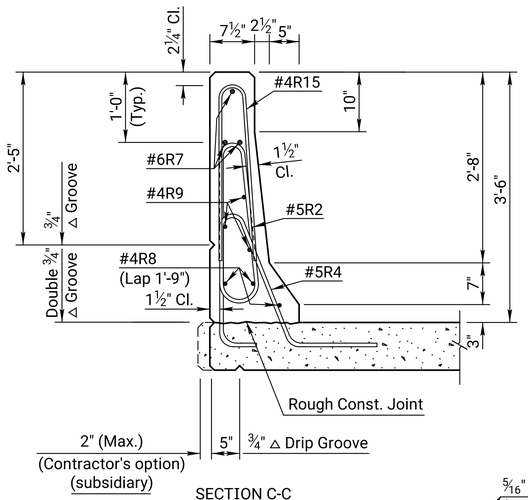

SECTION C-C
(3'-6" Section)

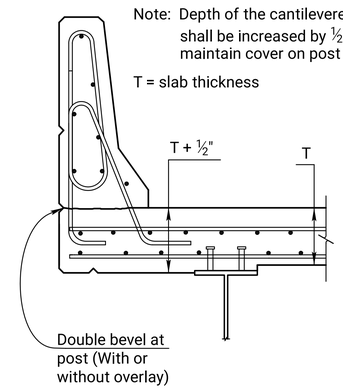

OVERHANG DETAILS

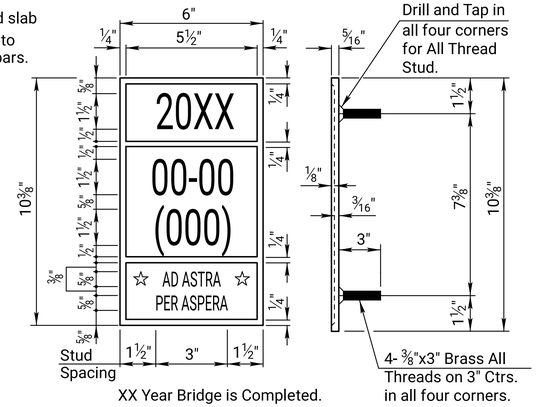

XX Year Bridge is Completed.

BRIDGE NUMBER PLATE
(1 Required)
(See Construction Layout for Location)

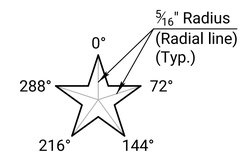

STAR GEOMETRY

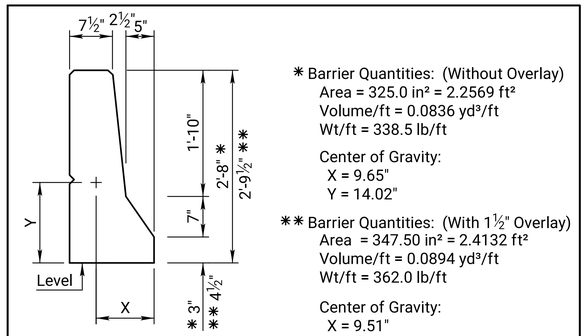

2'-8" SECTION

* Barrier Quantities: (Without Overlay)
Area = 325.0 in² = 2.2569 ft²
Volume/ft = 0.0836 yd³/ft
Wt/ft = 338.5 lb/ft

Center of Gravity:
X = 9.65"
Y = 14.02"

** Barrier Quantities: (With 1½" Overlay)
Area = 347.50 in² = 2.4132 ft²
Volume/ft = 0.0894 yd³/ft
Wt/ft = 362.0 lb/ft

Center of Gravity:
X = 9.51"
Y = 14.57"

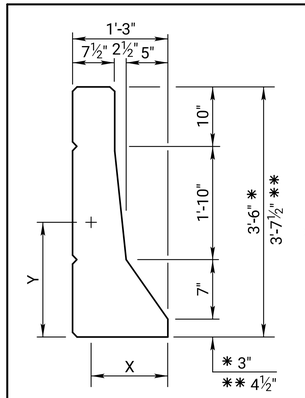

3'-6" SECTION

* Vertical Face (Without Overlay):
Area = 400.0 in² = 2.7778 ft²
Volume/ft = 0.1029 yd³/ft
Wt/ft = 416.7 lb/ft

Center of Gravity:
X = 9.95"
Y = 18.33"

** Vertical Face (With 1½" Overlay)
Area = 422.50 in² = 2.9340 ft²
Volume/ft = 0.1087 yd³/ft
Wt/ft = 440.1 lb/ft

Center of Gravity:
X = 9.82"
Y = 18.82"

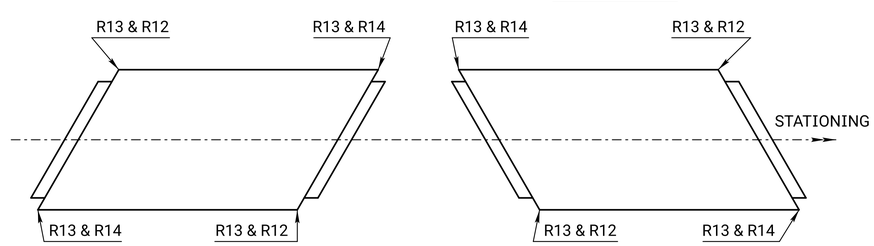

SKEW RT. SKEW LT.

SCHEMATIC OF END POST BARS

DESIGNER'S NOTE:
Add 0.069 Cu. Yds. to the concrete quantity for each entrance end block.
Longintudinal bar splice lengths:
#6 bar = 2'-7"
#5 bar = 1'-9"

TYPE GUARDRAIL POST	†MAXIMUM SKEW ANGLE (2" Cl.)	
	RD613	RD613A
Wood (6"x8")	43°	65°
Steel (W6x9)	60°	70°

† Skew Angle - If angle is greater than shown, end post will have to extend further past EWS.

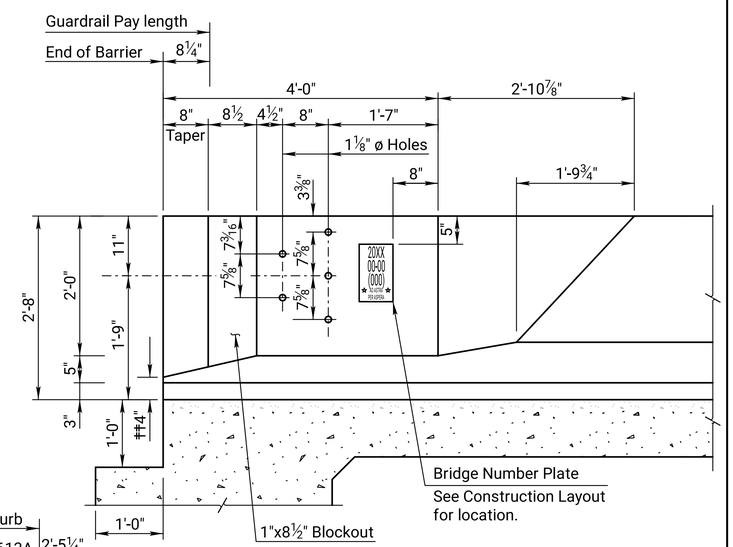

ELEVATION OF BARRIER END

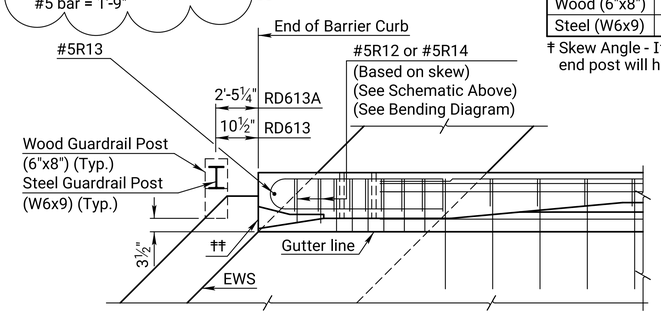

SKETCH FOR SKEWED STRUCTURE

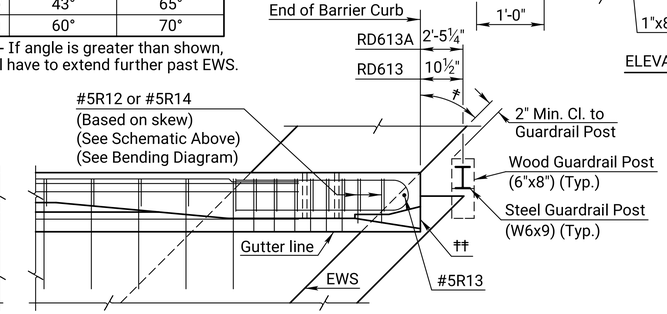

SKETCH FOR SKEWED STRUCTURE

‡‡ Extend the 4:1 taper to the top of the approach slab.

NO.	DATE	REVISIONS	BY	APP'D
06	07-07-23	Rebar renumber & detail updates	M.L.L.	M.A.H.
05	12-03-21	Update guardrail post spacing	M.L.L.	M.A.H.
04	12-03-21	Changed Bridge Number Plate detail	M.L.L.	M.A.H.

KANSAS DEPARTMENT OF TRANSPORTATION

Br. No. Sta.

F4 BARRIER
(Railroad Overpass Bridges)
(Without 1½" Overlay)

Proj. 0 Co.

DESIGNED	DETAILED	QUANTITIES	CADD
DESIGN CK.	DETAIL CK.	QUAN.CK.	CADD CK.

KDOT Graphics Certified 07-07-2023 Sh. No. 0

KDOT Graphics Certified

Plotted by : KDOT#CADD.Support_ks.gov 8-JUL-2023 00:09
File : br185bb.dgn