STATE	PROJECT NO.	YEAR	SHEET NO.	TOTAL SHEETS
KANSAS	0	0	0	0

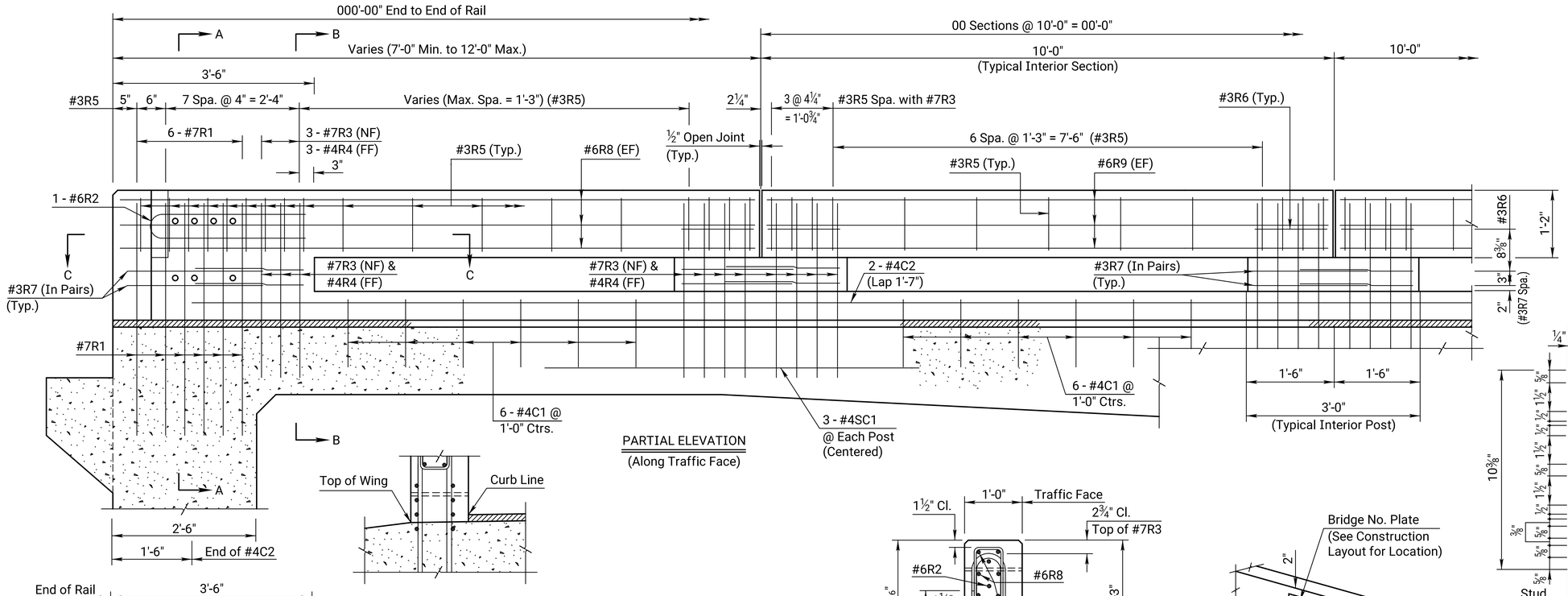

PARTIAL ELEVATION
(Along Traffic Face)

DETAIL A
(For bridges w/o an approach slab curb, detail top of wing at curb line as shown)

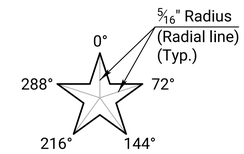

STAR GEOMETRY

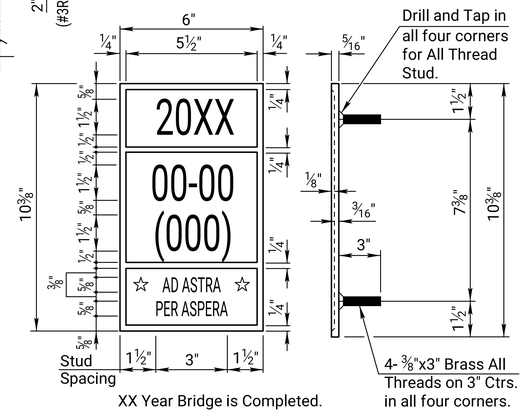

XX Year Bridge is Completed.

BRIDGE NUMBER PLATE
(1 Required)
(See Construction Layout for Location)

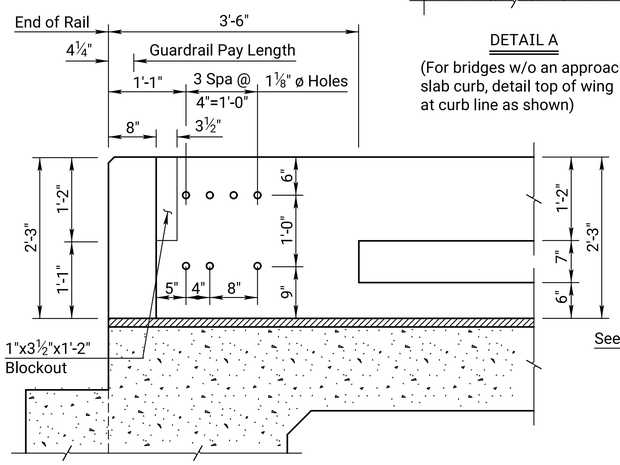

ELEVATION
(Dimensions at traffic face of rail.)

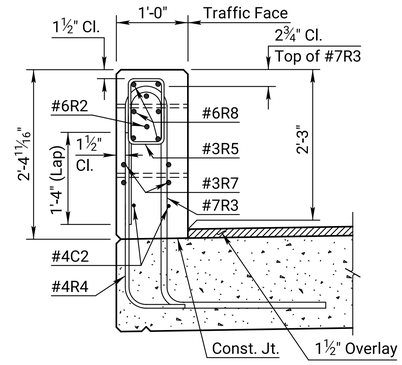

SECTION B-B

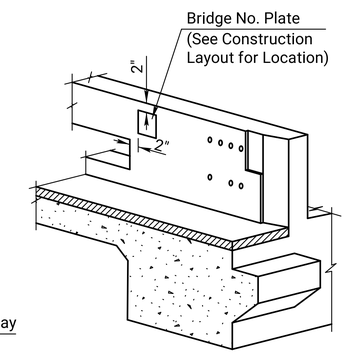

BRIDGE NUMBER PLATE PLACEMENT DETAIL
(If Required)

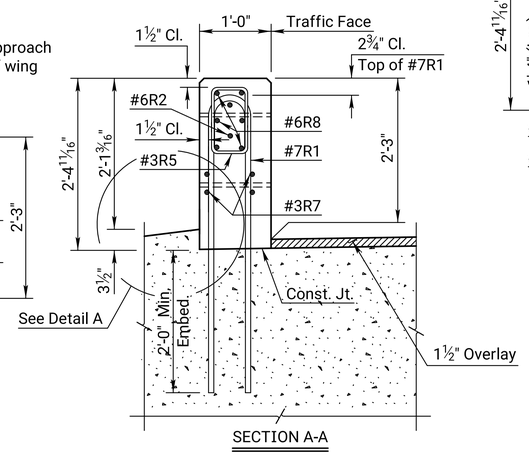

SECTION A-A

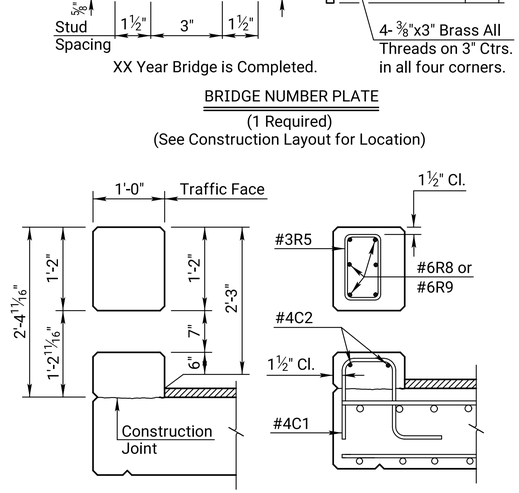

TYPICAL SECTIONS BETWEEN POSTS

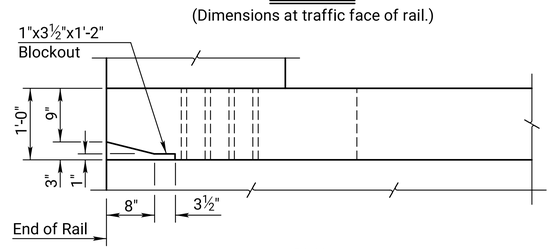

PLAN

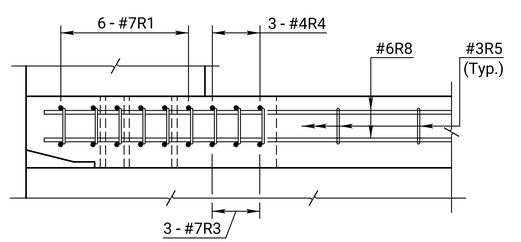

SECTION C-C

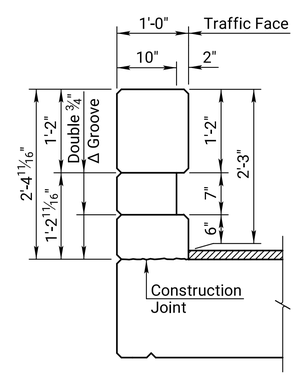

TYPICAL INTERIOR POST

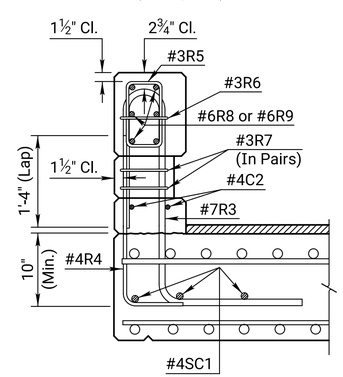

SECTION THRU POST

LEGEND
NF = Near Face
FF = Far Face
EF = Each Face

NO.	DATE	REVISIONS	BY	APP'D
03	12-03-21	Changed Bridge Number Plate detail	M.L.L.	M.A.H.
02	01-30-12	Clarify C2 Termination	J.P.J.	T.L.F.
01	04-12-07	Current Release		

KANSAS DEPARTMENT OF TRANSPORTATION

Br. No. 0-0- () Sta.

27" KANSAS CORRAL RAIL
(W-BEAM WITH RUBRAIL)
R.C. HAUNCHED SLAB (With Curb & 1½" Overlay)

Proj. 0 Co.

DESIGNED	DETAILED	QUANTITIES	CADD
DESIGN CK.	DETAIL CK.	QUAN.CK.	CADD CK.

KDOT Graphics Certified 10-24-2022 Sh. No. 0

KDOT Graphics Certified

Plotted by : KDOT#CADD.Support_ks.gov 8-NOV-2022 01:12
File : br183bb.dgn