STATE	PROJECT NO.	YEAR	SHEET NO.	TOTAL SHEETS
KANSAS	0	0	0	0

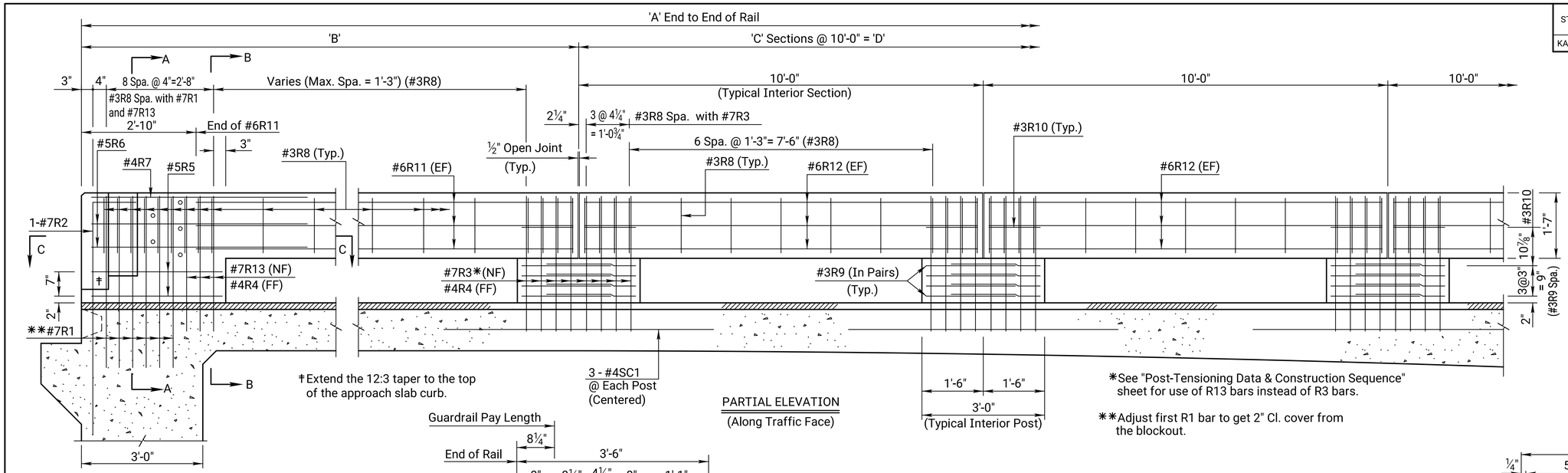

PARTIAL ELEVATION
(Along Traffic Face)

To be removed by the designer.

Span Combo	A	B	C	D
55-72-55	185'-0"	7'-6"	17	170'-0"
62-82-62	209'-0"	9'-6"	19	190'-0"
71-92-71	237'-0"	8'-6"	22	220'-0"

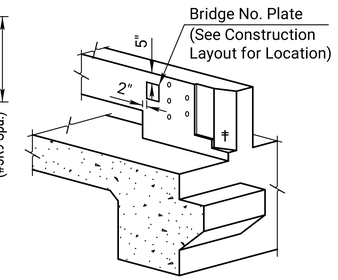

BRIDGE NUMBER PLATE PLACEMENT DETAIL

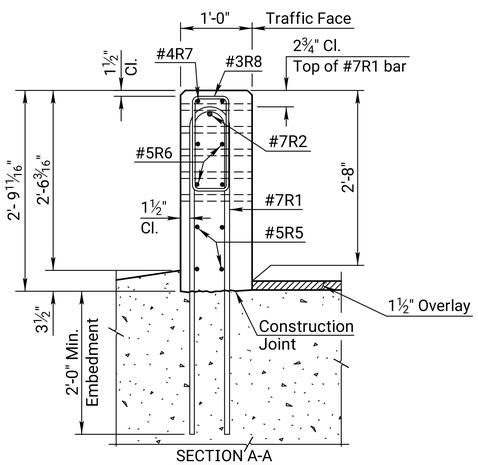

SECTION A-A

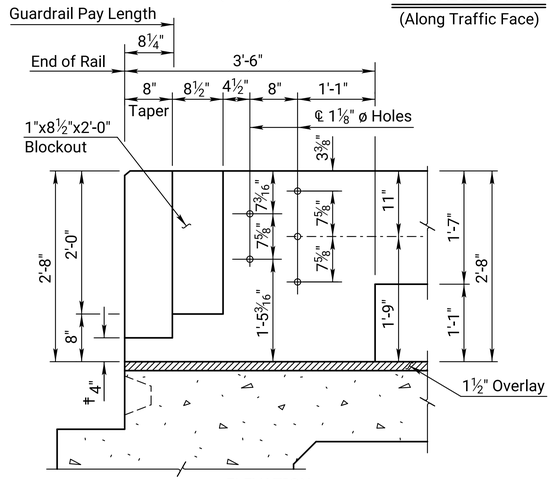

ELEVATION
(Dimensions at traffic face of rail)

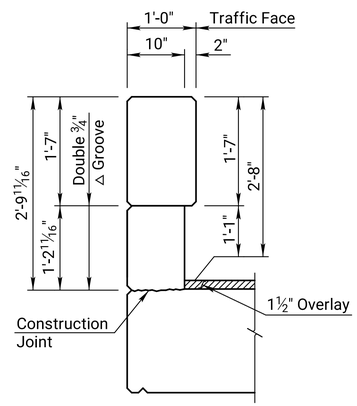

TYPICAL INTERIOR POST

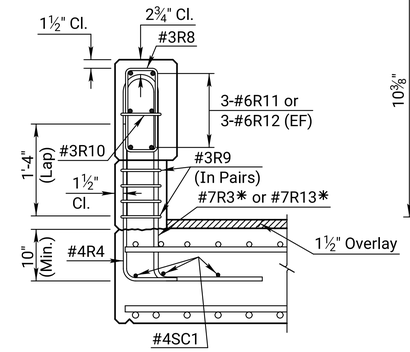

SECTION THRU POST

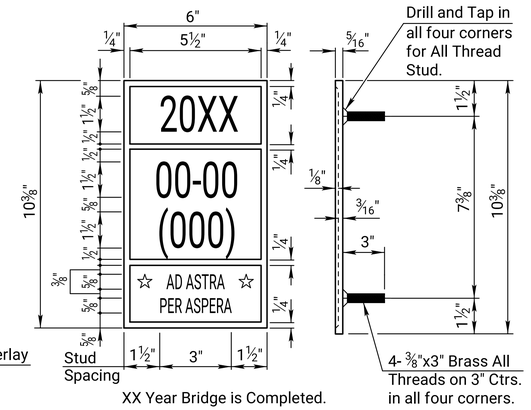

BRIDGE NUMBER PLATE
(1 Required)
(See Construction Layout for Location)

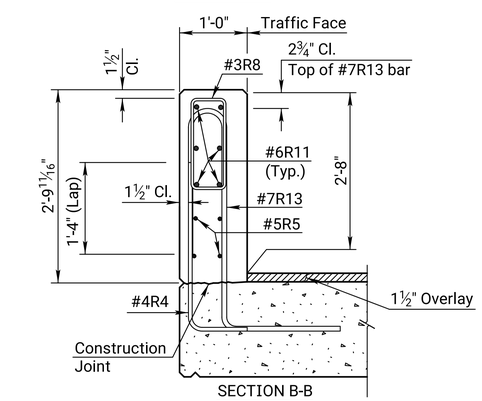

SECTION B-B

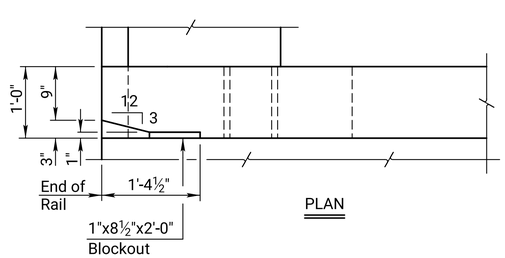

PLAN

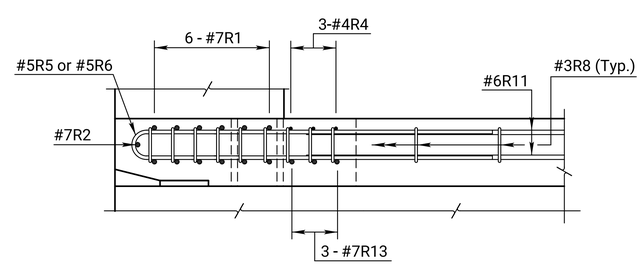

SECTION C-C

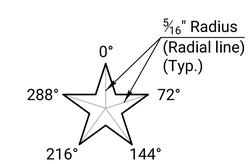

STAR GEOMETRY

LEGEND
NF = Near Face
FF = Far Face
EF = Each Face

NO.	DATE	REVISIONS	BY	APP'D
03	12-03-21	Removed a span combo from dimension table	M.L.L.	M.A.H.
02	12-03-21	Changed Bridge Number Plate detail	M.L.L.	M.A.H.
01	04-12-07	Current Release		

KANSAS DEPARTMENT OF TRANSPORTATION

Br. No. Sta.

32" KANSAS CORRAL RAIL
P. T. HAUNCHED SLAB (Without Curb With 1½" Overlay)

Proj. 0 Co.

DESIGNED	DETAILED	QUANTITIES	CADD
DESIGN CK.	DETAIL CK.	QUAN.CK.	CADD CK.

KDOT Graphics Certified 08-16-2022 Sh. No. 0

KDOT Graphics Certified

Plotted by : pwmushock 30-AUG-2022 14:18
File : br182hh.dgn