STATE	PROJECT NO.	YEAR	SHEET NO.	TOTAL SHEETS
KANSAS	0	0	0	0

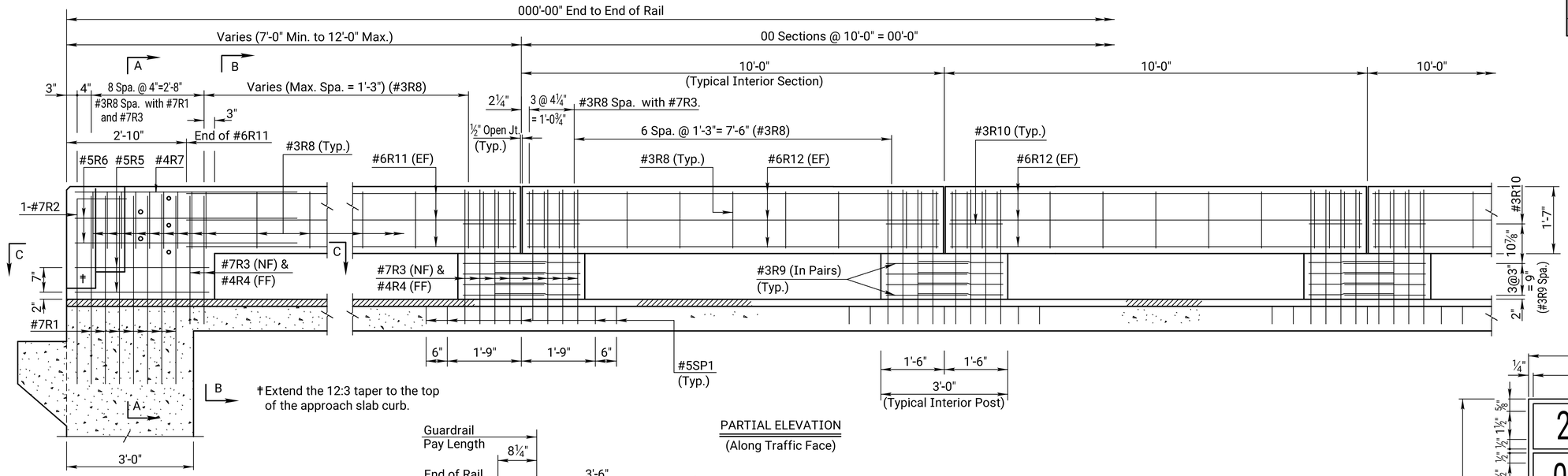

PARTIAL ELEVATION
(Along Traffic Face)

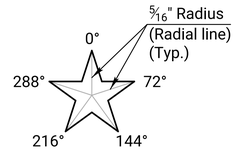

STAR GEOMETRY

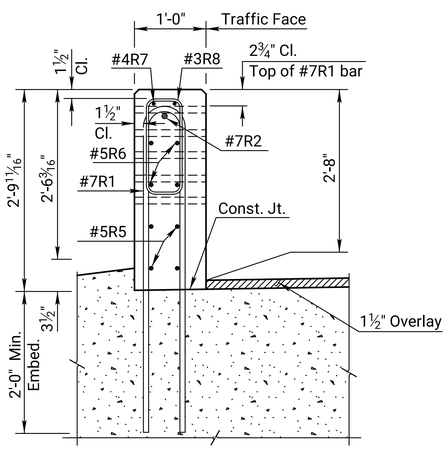

SECTION A-A

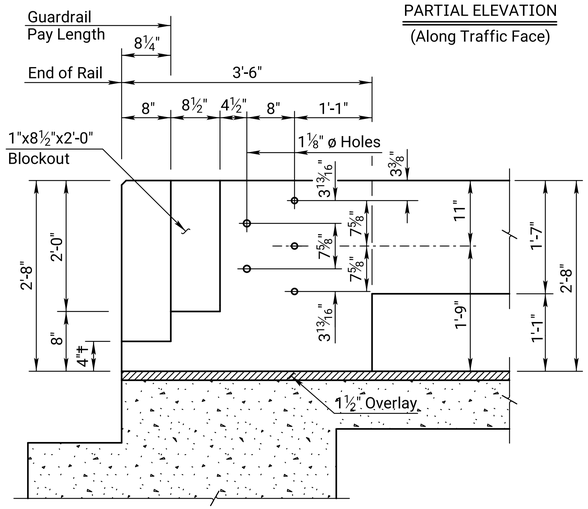

ELEVATION
(Dimensions at traffic face of rail.)

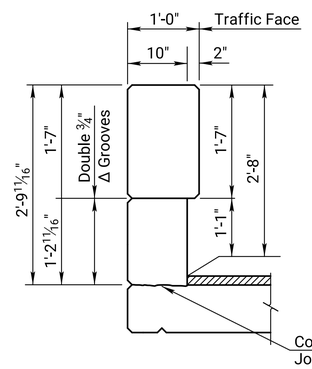

TYPICAL INTERIOR POST

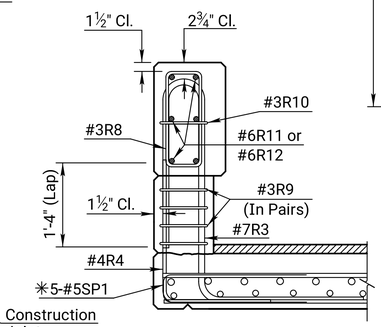

SECTION THRU POST

✳Note:
The hook may be canted to provide clearance and/or fit between reinforcing.

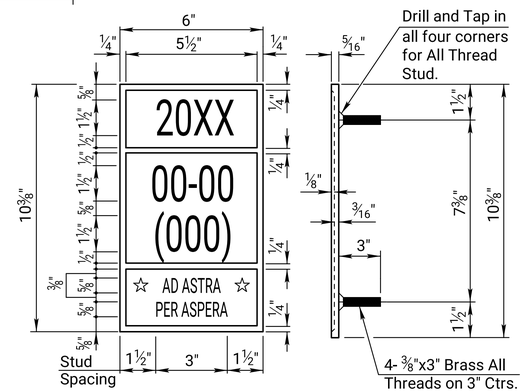

BRIDGE NUMBER PLATE
(1 Required)
(See Construction Layout for Location)

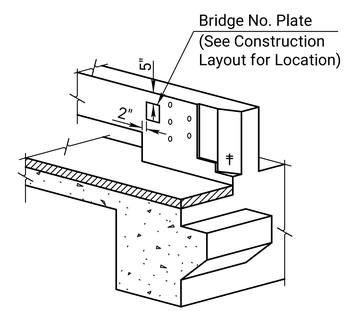

BRIDGE NUMBER PLATE PLACEMENT DETAIL

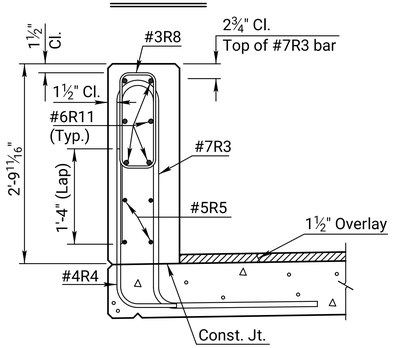

SECTION B-B

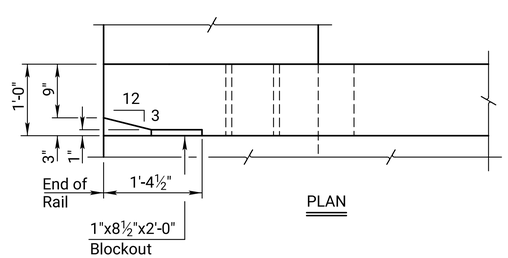

PLAN

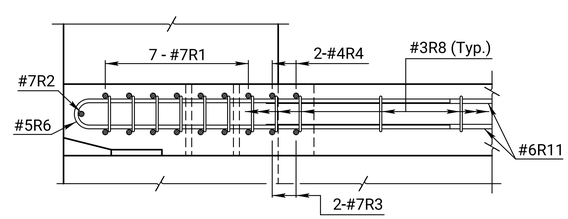

SECTION C-C

NO.	DATE	REVISIONS	BY	APP'D
03				
02	12-03-21	Changed Bridge Number Plate detail	M.L.L.	M.A.H.
01	04-12-07	Current Release		

KANSAS DEPARTMENT OF TRANSPORTATION

Br. No. Sta.

32" KANSAS CORRAL RAIL
(Without Curb & With 1½" Overlay)

Proj. 0 Co.

DESIGNED	DETAILED	QUANTITIES	CADD
DESIGN CK.	DETAIL CK.	QUAN.CK.	CADD CK.

KDOT Graphics Certified 07-12-2022 Sh. No. 0

KDOT Graphics Certified

Plotted by : pwmushock 30-AUG-2022 14:16
File : br182cc.dgn