STATE	PROJECT NO.	YEAR	SHEET NO.	TOTAL SHEETS
KANSAS	0	0	0	0

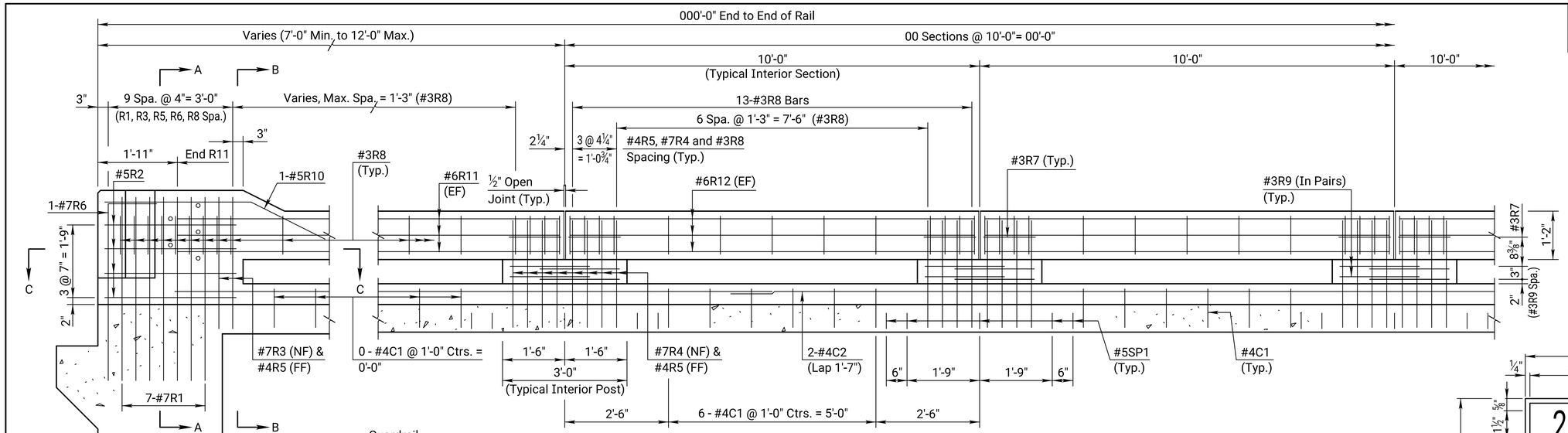

PARTIAL ELEVATION
(Along Traffic Face)

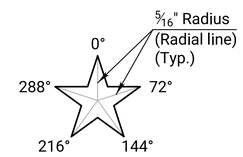

STAR GEOMETRY

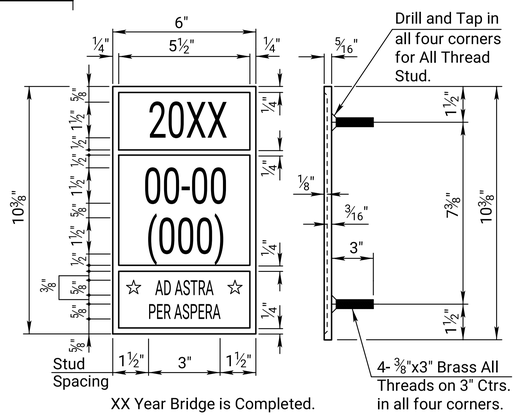

XX Year Bridge is Completed.

BRIDGE NUMBER PLATE
(1 Required)
(See Construction Layout for Location)

✳ The hook may be canted to provide clearance and/or fit between reinforcing.

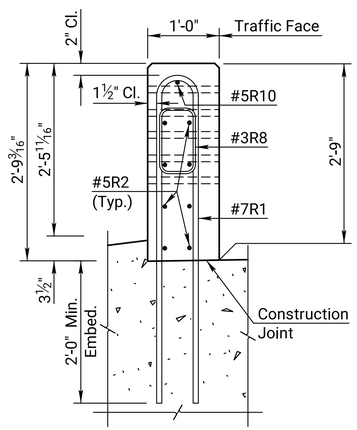

SECTION A-A

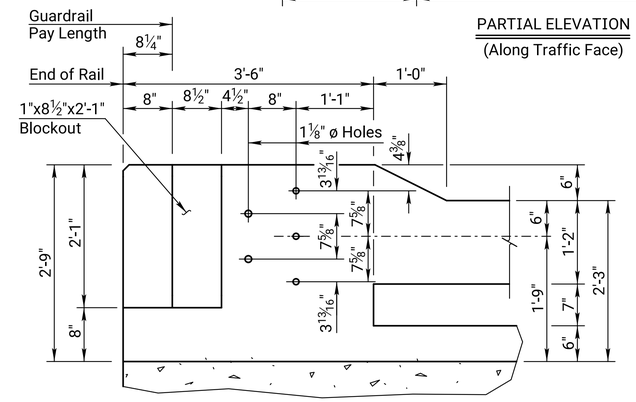

ELEVATION
(Dimensions at traffic face of rail.)

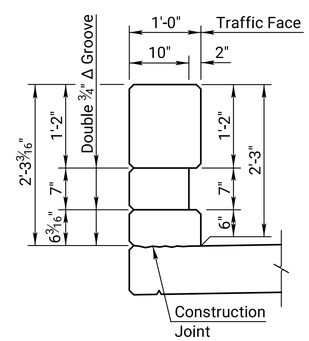

TYPICAL INTERIOR POST

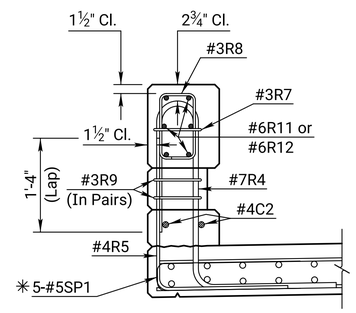

SECTION THRU POST

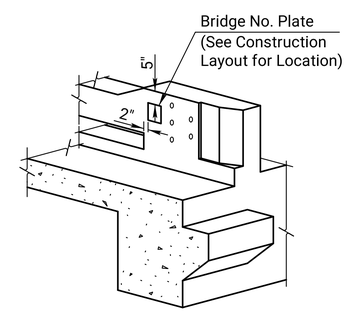

BRIDGE NUMBER PLATE PLACEMENT DETAIL

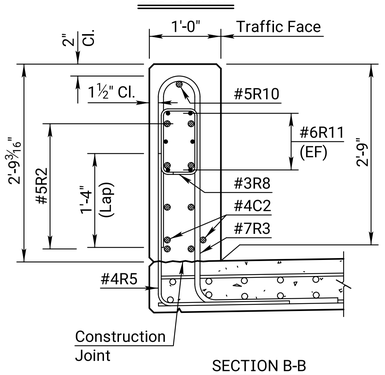

SECTION B-B

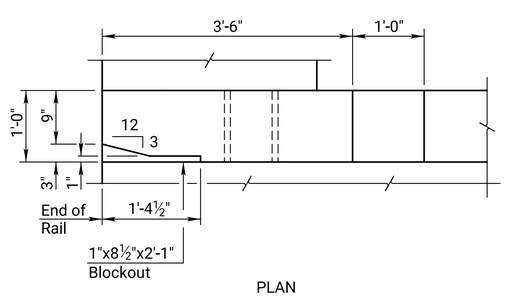

PLAN

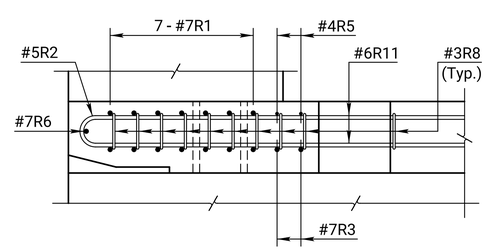

SECTION C-C

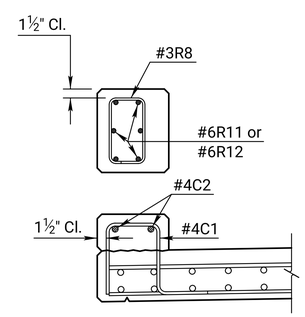

TYPICAL SECTION BETWEEN POSTS

NO.	DATE	REVISIONS	BY	APP'D
03	12-03-21	Changed Bridge Number Plate detail	M.L.L.	M.A.H.
02	01-30-12	Clarify C2 Termination	J.P.J.	T.L.F.
01	02-14-05	Current Release		

KANSAS DEPARTMENT OF TRANSPORTATION

Br. No. 0-0- () Sta.

27" KANSAS CORRAL RAIL
(With Curb)

Proj. 0 Co.

DESIGNED	DETAILED	QUANTITIES	CADD
DESIGN CK.	DETAIL CK.	QUAN.CK.	CADD CK.

KDOT Graphics Certified 10-11-2022 Sh. No. 0

KDOT Graphics Certified

Plotted by : KDOT#CADD.Support_ks.gov 8-NOV-2022 01:05
File : br181d.dgn