STATE	PROJECT NO.	YEAR	SHEET NO.	TOTAL SHEETS
KANSAS	0	0	0	0

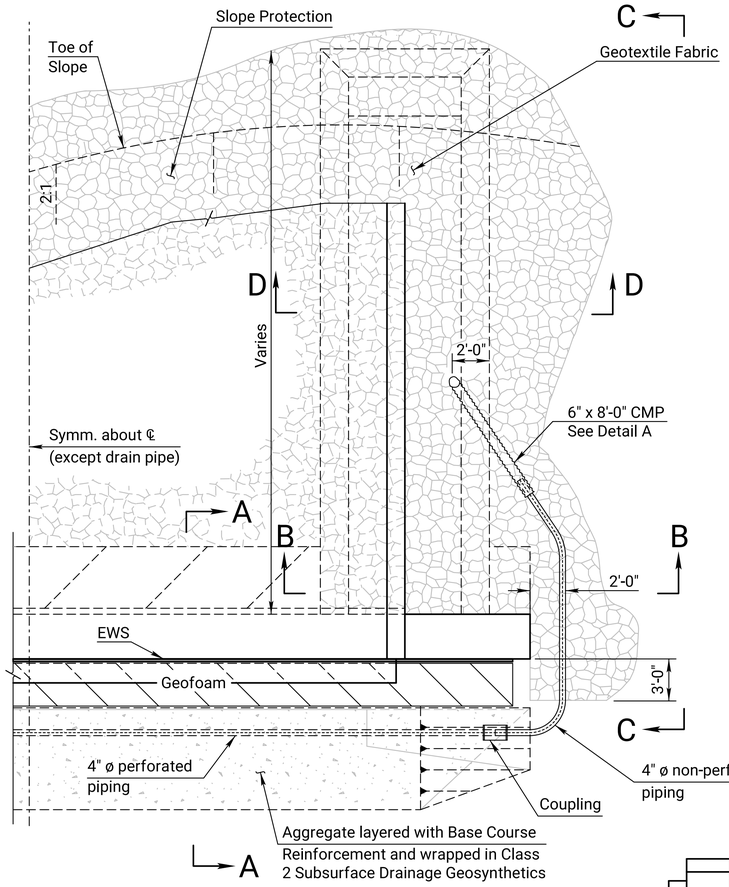

PLAN

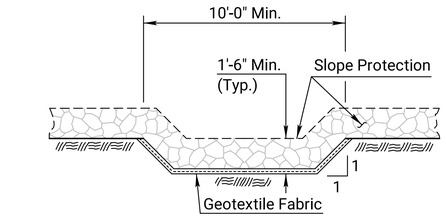

SECTION D-D

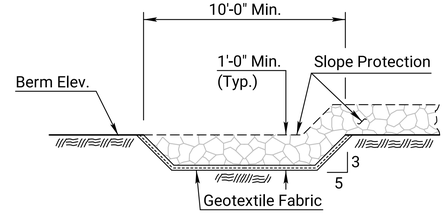

SECTION B-B

GENERAL NOTES

GEOSYNTHETICS: Use material that complies with KDOT Specification Section 1710 Class 2 subsurface drainage fabric. Place the Class 2 subsurface drainage fabric on graded and compacted material shaped as shown. Allow for enough material so that the sides can be overlapped and that the ends fully separate the aggregate drain from the embankment soils. Place the perforated drain pipe and couple to non-perforated pipe as shown. Allow the non-perforated pipe to pass through a hole carefully cut in fabric. Place aggregate within fabric to just leave the top of the pipe visible. Verify the slope of the pipe, that it is not damaged or displaced and that the couplers are firmly coupled. Continue to backfill to the elevation and shape shown.

AGGREGATE: Use aggregates that complies with KDOT Specifications for SB-1 or SB-2.

BASE COURSE REINFORCEMENT: Use "Base Course Reinforcement" that complies with KDOT Specification Division 1700 or approved material. Place this material in uniform layers without gaps or sags per the manufacturer's recommendations.

GEOFOAM: Use "Geofoam" that complies with ASTM D6817 EPS 12. Acceptance according to Type "C" certification. Bond this material to the backwall protection using materials recommended by the manufacturer.

GEOTEXTILE FABRIC: Use "Geotextile Fabric" that conforms with KDOT Specification 1710 and found on the Prequalified Materials List.

PIPE: Place perforated pipe within the limits and use non-perforated pipe outside the limits of the Abutment Aggregate Drain.

ABUTMENT AGGREGATE DRAIN: The Bridge Contractor shall excavate to the limits shown on the Bridge Excavation Sheet. Backfill, compact & grade the cohesive soil to the limits shown. Place the bridge backwall protection, geofoam, geotextile, perforated pipe, alternating layers of aggregate and base course reinforcement as shown. Place the outlet pipe, the CMP, and the backfill. Separate as shown the entire Abutment Aggregate Drain with the geotextile.

BRIDGE BACKWALL PROTECTION SYSTEM: Apply a non coal-tar Bridge Backwall Protection System to the approach side of the abutments and the wings in accordance with KDOT Specifications and the manufacturer's recommendations. Cover the abutments and wings to the limits shown on the details. Repair any damage done at no charge to the state.

Compact the abutment backfill. See the KDOT Specifications.

Perforated pipe and non-perforated outlet pipe shall be corrugated polyethylene tubing conforming to the KDOT Specifications.

Fit the CMP end section with ¼" galvanized mesh screen to prevent the entrance of rodents. Seal the joint between the outlet pipe and the end section with a joint sealer.

COHESIVE SOILS: Grade the bottom surface of the excavated area to drain as shown. Backfill this area with a cohesive type of soil. The soil will have a Unified Soil Classification of CL, CH, ML or MH according to ASTM D2487 Classification System with a minimum plasticity index of 13. Compact the material to Type A, MR-90 specifications. If the plasticity index cannot be met, add and mix Bentonite to the soil prior to placement and compaction so that the PI ≥ 13.

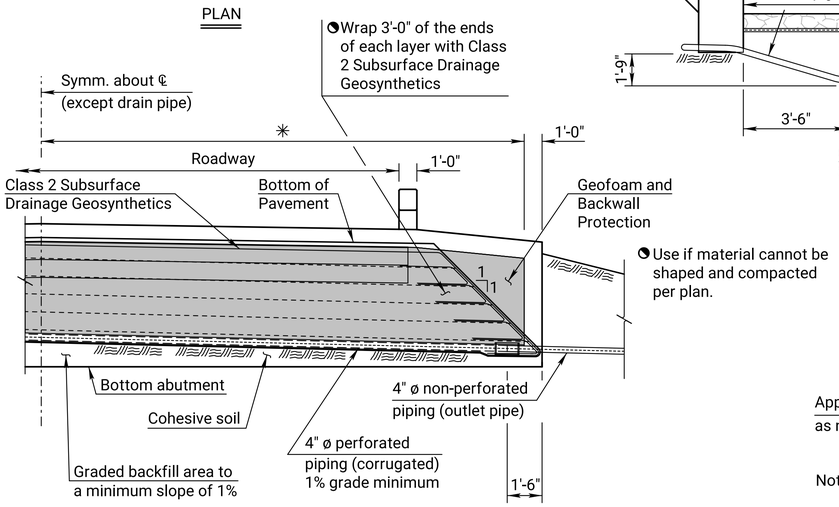

✳ Limits of Bridge Backwall Protection System & Geofoam

ELEVATION

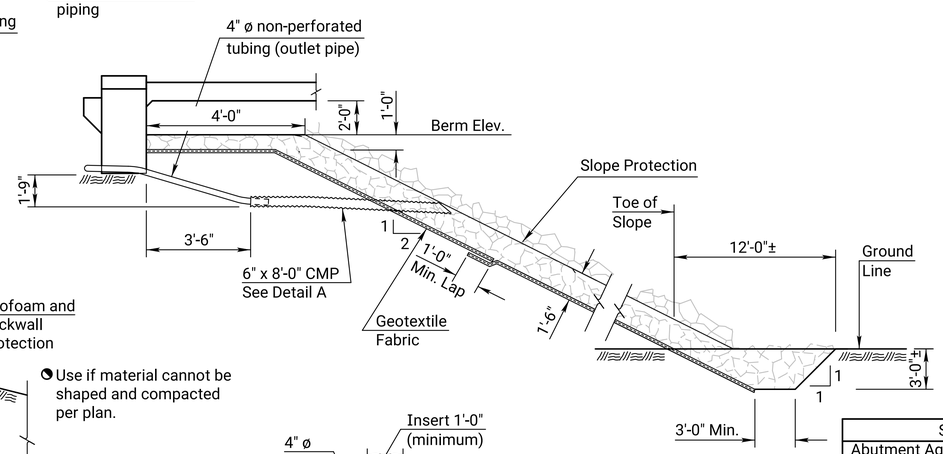

SECTION C-C

Note: The toe shall extend the entire width of the Slope Protection.

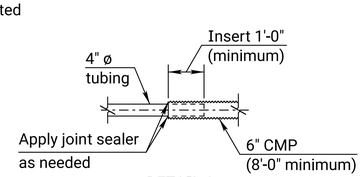

DETAIL A

Note: The 1'-0" lap and joint sealer may be replaced by a reducing coupler at the junction of the CMP and the 4" round tubing. For stream crossings place outlet on downstream side of bridge.

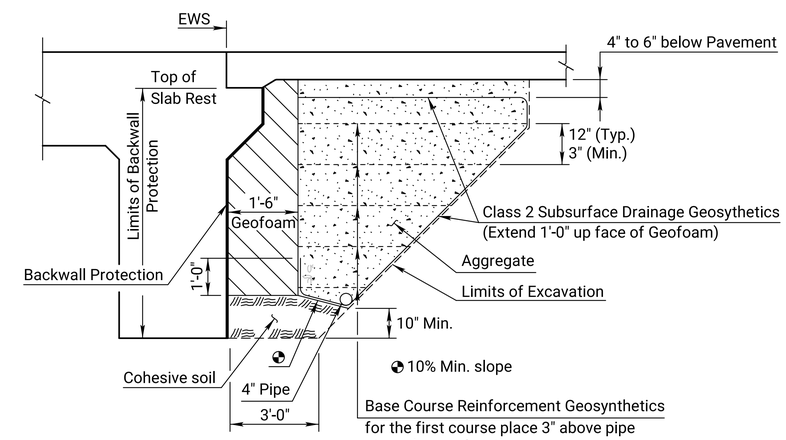

SECTION A-A
(Abutment Aggregate Drain)
Taken at ℄

SUMMARY OF QUANTITIES (2 Abutments)	
Abutment Aggregate Drain	Cu. Yds.
Bridge Backwall Protection System	Sq. Yds.
Items subsidiary to Abutment Aggregate Drain	
4" ø Perforated Pipe	Lin. Ft.
4" ø Outlet Pipe	Lin. Ft.
6" ø CMP	Lin. Ft.
Geosynthetics (Class 2 Subsurface Drainage)	Sq. Yds.
Geosynthetics (Base Course Reinforcement)	Sq. Yds.
Geofoam	Cu. Yds.
Items subsidiary to Slope Protection	
Geotextile Fabric	Sq. Yds.

NO.	DATE	REVISIONS	BY	APP'D
08	05-05-23	Removed soil cap; Geofoam bottom flat	M.L.L.	M.A.H.
07	12-11-18	Corrected std. base file name	M.L.L.	J.P.J.
06	02-04-15	Modified Per 2015 Specification	J.P.J.	C.E.R.

KANSAS DEPARTMENT OF TRANSPORTATION

Br. No. 0-0- () Sta.

ABUTMENT AGGREGATE DRAIN
(Stream, Drip-Line)

Proj. 0 Co.

DESIGNED	J.P.J.	DETAILED	J.P.J.	QUANTITIES	CADD	M.L.L.
DESIGN CK.		DETAIL CK.		QUAN.CK.	CADD CK.	

KDOT Graphics Certified 05-05-2023 Sh. No. 0

KDOT Graphics Certified

Plotted by : pwLaura 12-JUN-2025 14:08
File : br104cc.dgn